CDX-CA705M

SERVICE MANUAL

US Model

Ver 1.1 2003. 02

• The tuner and CD sections have no adjustments.

Model Name Using Similar Mechanism	CDX-CA700/CA700X
CD Drive Mechanism Type	MG-393XA-121//Q
Optical Pick-up Name	KSS-720A

AUDIO POWER SPECIFICATIONS (US Model)
POWER OUTPUT AND TOTAL HARMONIC DISTORTION
23.2 watts per channel minimum continuous average power into 4 ohms, 4 channels driven from 20 Hz to 20 kHz with no more than 5% total harmonic distortion.

SPECIFICATIONS

CD player section

Signal-to-noise ratio	90 dB
Frequency response	10 – 20,000 Hz
Wow and flutter	Below measurable limit

Tuner section

FM

Tuning range	FM tuning interval; 50 kHz/200 kHz switchable 87.5 – 108 MHz (at 50 kHz step) 87.5 – 107.9 MHz (at 200 kHz step)
Antenna terminal	External antenna connector
Intermediate frequency	10.7 MHz/450 kHz
Usable sensitivity	8 dBf
Selectivity	75 dB at 400 kHz
Signal-to-noise ratio	66 dB (stereo), 72 dB (mono)
Harmonic distortion at 1 kHz	0.6% (stereo), 0.3% (mono)
Separation	35 dB at 1 kHz
Frequency response	30 – 15,000 Hz

AM

Tuning range	AM tuning interval; 9 kHz/10 kHz switchable 531 – 1,602 kHz (at 9 kHz step) 530 – 1,710 kHz (at 10 kHz step)
Antenna terminal	External antenna connector
Intermediate frequency	10.7 MHz/450 kHz
Sensitivity	30 µV

Power amplifier section

Outputs	Speaker outputs (sure seal connectors)
Speaker impedance	4 – 8 ohms
Maximum power output	52 W × 4 (at 4 ohms)

General

Outputs	Audio outputs (front/rear) Power antenna relay control terminal Power amplifier control terminal
Inputs	Telephone ATT control terminal Illumination control terminal BUS control input terminal BUS audio input terminal Remote controller input terminal Antenna input terminal
Tone controls	Bass ±10 dB at 62 Hz Treble ±10 dB at 16 kHz
Loudness	±8 dB at 100 Hz ±2 dB at 10 kHz

– Continued on next page –

FM/AM COMPACT DISC PLAYER

9-874-008-02
2003B0400-1
© 2003. 02

Sony Corporation
e Vehicle Company
Published by Sony Engineering Corporation

SONY®

Power requirements	12 V DC car battery (negative ground)
Dimensions	Approx. 178 × 50 × 178 mm (7 1/8 × 2 × 7 1/8 in.) (w/h/d)
Mounting dimensions	Approx. 182 × 53 × 162 mm (7 1/4 × 2 1/8 × 6 1/2 in.) (w/h/d)
Mass	Approx. 1.2 kg (2 lb. 10 oz.)
Supplied accessories	Parts for installation and connections (1 set) Front panel case (1) Card remote commander (1)

Note

This unit cannot be connected to a digital preamplifier or an equalizer.

Design and specifications are subject to change without notice.

SERVICE NOTES

NOTES ON HANDLING THE OPTICAL PICK-UP BLOCK OR BASE UNIT

The laser diode in the optical pick-up block may suffer electrostatic breakdown because of the potential difference generated by the charged electrostatic load, etc. on clothing and the human body.
During repair, pay attention to electrostatic breakdown and also use the procedure in the printed matter which is included in the repair parts.
The flexible board is easily damaged and should be handled with care.

NOTES ON LASER DIODE EMISSION CHECK

The laser beam on this model is concentrated so as to be focused on the disc reflective surface by the objective lens in the optical pick-up block. Therefore, when checking the laser diode emission, observe from more than 30 cm away from the objective lens.

Notes on Chip Component Replacement

- Never reuse a disconnected chip component.
- Notice that the minus side of a tantalum capacitor may be damaged by heat.

CLASS 1
LASER PRODUCT

This label is located on the bottom of the chassis.

CAUTION—INVISIBLE LASER RADIATION WHEN OPEN
DO NOT STARE INTO BEAM OR
VIEW DIRECTLY WITH OPTICAL INSTRUMENTS

This label is located on the drive unit's internal chassis.

SAFETY-RELATED COMPONENT WARNING!!

COMPONENTS IDENTIFIED BY MARK ⚠ OR DOTTED LINE WITH MARK ⚠ ON THE SCHEMATIC DIAGRAMS AND IN THE PARTS LIST ARE CRITICAL TO SAFE OPERATION. REPLACE THESE COMPONENTS WITH SONY PARTS WHOSE PART NUMBERS APPEAR AS SHOWN IN THIS MANUAL OR IN SUPPLEMENTS PUBLISHED BY SONY.

CAUTION

Use of controls or adjustments or performance of procedures other than those specified herein may result in hazardous radiation exposure.

If the optical pick-up block is defective, please replace the whole optical pick-up block.
Never turn the semi-fixed resistor located at the side of optical pick-up block.

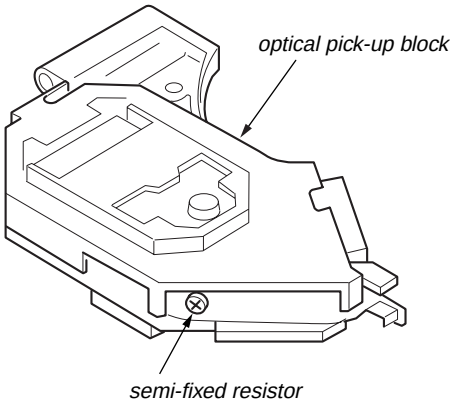

TEST DISCS

This set can playback CD-R and CD-ROM discs. The following test discs should be used to check the capability:

CD-R test disc TCD-R082LMT (Part No. J-2502-063-1)
CD-RW test disc TCD-W082L (Part No. J-2502-063-2)

Notes on CD-R/CD-RW discs

- You can play CD-Rs (recordable CDs)/CD-RWs (rewritable CDs) designed for audio use on this unit.
  Look for these marks to distinguish CD-Rs/CD-RWs for audio use.

These marks denote that a disc is not for audio use.

- Some CD-Rs/CD-RWs (depending on the equipment used for its recording or the condition of the disc) may not play on this unit.
- You cannot play a CD-R/a CD-RW that is not finalized*.

* A process necessary for a recorded CD-R/CD-RW disc to be played on the audio CD player.

TABLE OF CONTENTS

1. GENERAL
Location of controls 4
Connections 5

2. DISASSEMBLY
2-1. Sub Panel Assy 7
2-2. CD Mechanism Block 8
2-3. Main Board 8
2-4. Heat Sink 9
2-5. Chassis (T.U) Assy 9
2-6. Disc In Board 10
2-7. Servo Board 10
2-8. Shaft Roller Assy, Load Board 11
2-9. Floating Block Assy 11
2-10. Optical Pick-up Block 12

3. DIAGRAMS
3-1. IC Pin Description 13
3-2. Block Diagram –CD Section– 15
3-3. Block Diagram –Tuner Section– 16
3-4. Block Diagram –Display Section– 17
3-5. Circuit Boards Location 17
3-6. Printed Wiring Boards –CD Mechanism Section– 18
3-7. Schematic Diagram –CD Mechanism Section– 20
3-8. Schematic Diagram –Main Section (1/3)– 21
3-9. Schematic Diagram –Main Section (2/3)– 22
3-10. Schematic Diagram –Main Section (3/3)– 23
3-11. Printed Wiring Board –Main Section– 24
3-12. Printed Wiring Board –Relay Section– 26
3-13. Schematic Diagram –Relay Section– 27
3-14. Printed Wiring Board –Key Section– 28
3-15. Schematic Diagram –Key Section– 29

4. EXPLODED VIEWS
4-1. Chassis Section 33
4-2. Main Board Section 34
4-3. Front panel Section 35
4-4. CD Mechanism Section (1) 36
4-5. CD Mechanism Section (2) 37
4-6. CD Mechanism Section (3) 38

5. ELECTRICAL PARTS LIST 39

EXTENSION CABLE AND SERVICE POSITION

When repairing or servicing this set, connect the jig (extension cable) as shown below.

- Connect the MAIN board (CNP301) and the SERVO board (CN1) with the extension cable (Part No. J-2502-062-1).

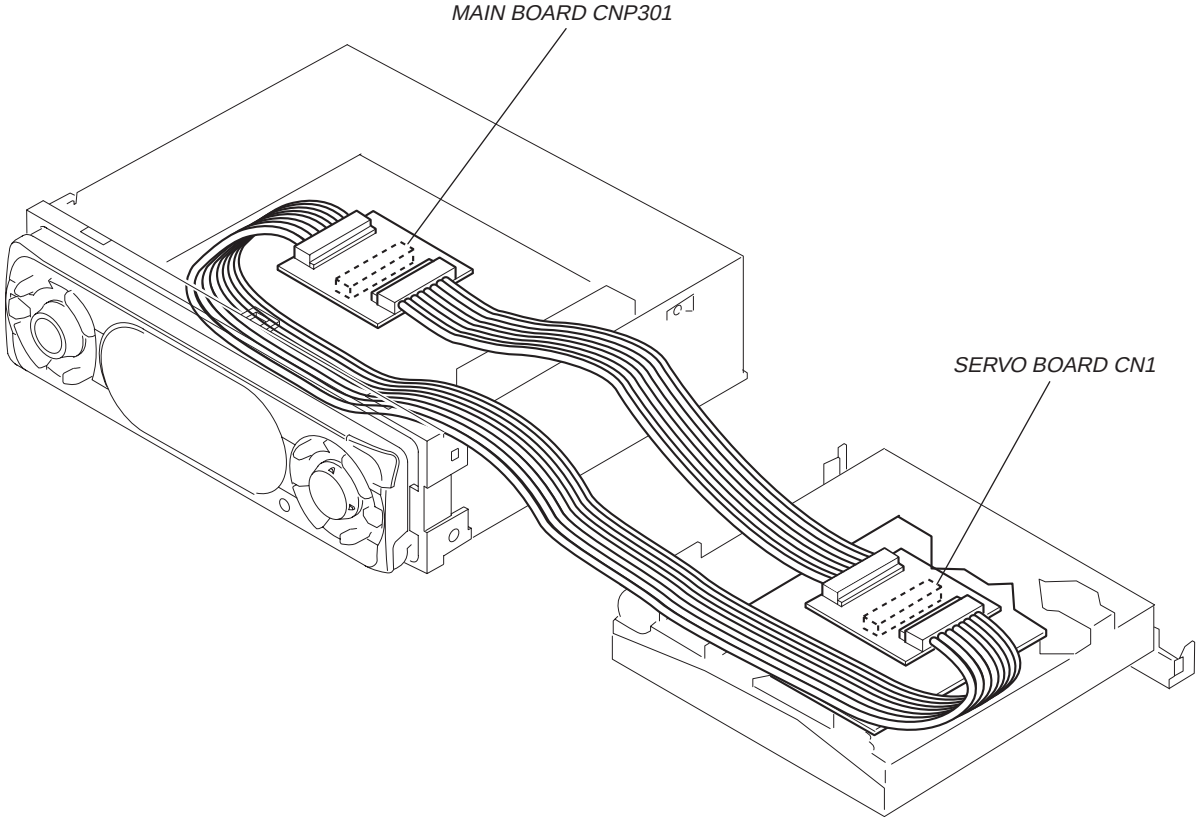

SECTION 1
GENERAL

This section is extracted from instruction manual.

Location of controls

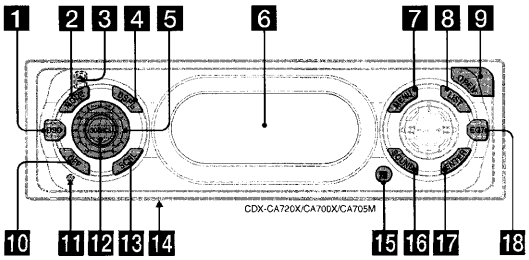

Refer to the pages listed for details.

1 **DSO button** 19
2 **MODE button**
To change the operation.
3 **⏏ (eject) button** (located on the front side of the unit, behind the front panel) 9
4 **DSPL (display mode change) button**
5 **Volume control dial**
6 **Display window**
7 **MENU button**
To display the menus.
8 **LIST button** 12, 15
9 **OPEN button** 8, 9
10 **OFF (Stop/Power off) button***1 8, 9
11 **RESET button** (located on the front side of the unit, behind the front panel) 7
12 **SOURCE (Power on/Radio/CD/MD) button**
To select the source.
13 **SCRL (scroll) button** 10
14 **Frequency select switch (located on the bottom of the unit)***2
The AM (FM) tuning interval is factory-set to the 10 k (200 k) position. Make sure that the 9 k (50 k) position is selected.
15 **Receptor for the card remote commander**
16 **SOUND button** 17
17 **ENTER button**
To enter a setting.
18 **EQ7 button** 19

*1 **Warning when installing in a car without an ACC (accessory) position on the ignition switch**
After turning off the ignition, be sure to press (OFF) on the unit for 2 seconds to turn off the clock display.
Otherwise, the clock display does not turn off and this causes battery drain.
*2 *CDX-CA705M only*

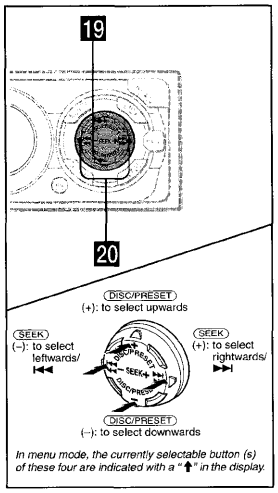

19 **DISC/PRESET buttons (+/–)**
To receive preset stations, change the disc* and select a menu.
** When an optional CD/MD unit is connected.*
20 **SEEK buttons (–/+)**
To skip tracks, fast-forward, reverse a track, tune in stations automatically, find a station manually, and select a setting.

Card remote commander RM-X118

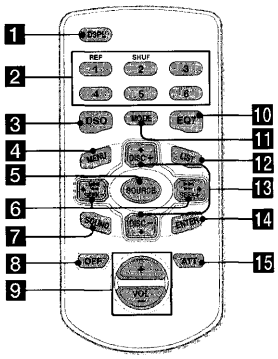

The corresponding buttons of the card remote commander control the same functions as those on this unit.

1 **DSPL button**
2 **Number buttons**
(1) **REP**
(2) **SHUF**
To store stations, receive stored stations.
3 **DSO button**
4 **MENU button**
5 **SOURCE button**
6 **SEEK (⬅/➡) buttons**
7 **SOUND button**
8 **OFF button**
9 **VOL (+/–) buttons**
10 **EQ7 button**
11 **MODE button**
12 **LIST button**
13 **DISC (⬆/⬇) buttons**
14 **ENTER button**
15 **ATT button**

Note
If the unit is turned off by pressing (OFF) for 2 seconds, it cannot be operated with the card remote commander unless (SOURCE) on the unit is pressed, or a disc is inserted to activate the unit first.

Tip
See "Replacing the lithium battery" on page 22 for details on how to replace the batteries.

Connections

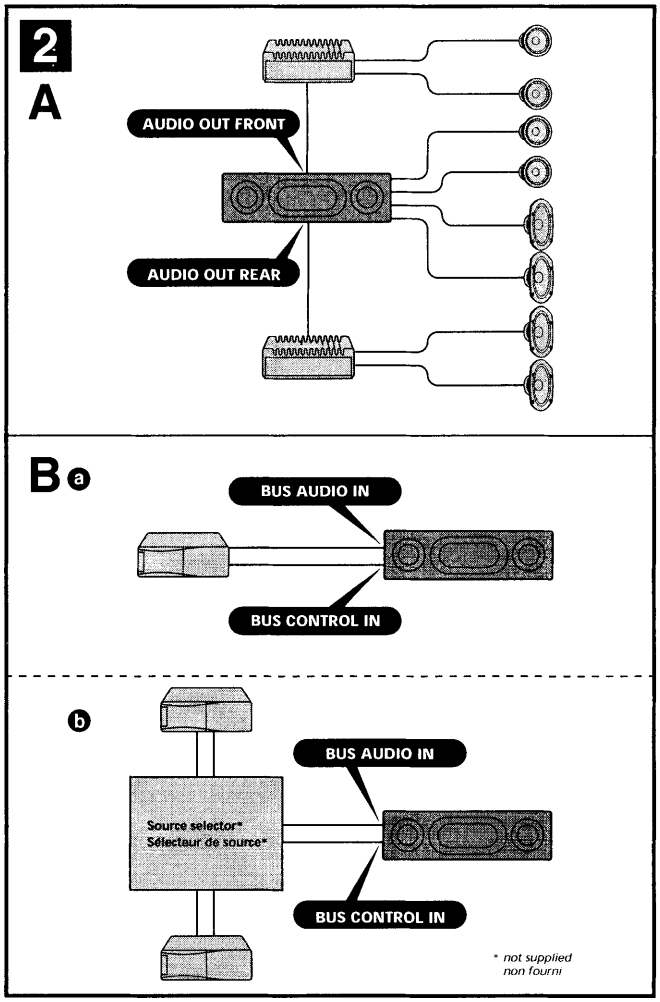

Connection example (2)

Notes **(2-A)**
- *Be sure to connect the ground cord before connecting the amplifier.*
- *If you connect an optional power amplifier and do not use the built-in amplifier, the beep sound will be deactivated.*

Tip **(2-B- b)**
For connecting two or more CD/MD changers, the source selector XA-C30 (optional) is necessary.

Exemple de raccordement (2)

Remarques **(2-A)**
- *Raccordez d'abord le fil de masse avant de raccorder l'amplificateur.*
- *Si vous raccordez un amplificateur de puissance en option et que vous n'utilisez pas l'amplificateur intégré, le bip sonore est désactivé.*

Conseil **(2-B- b)**
Dans le cas du raccordement de deux changeurs de CD/MD ou plus, le sélecteur de source XA-C30 (en option) est requis.

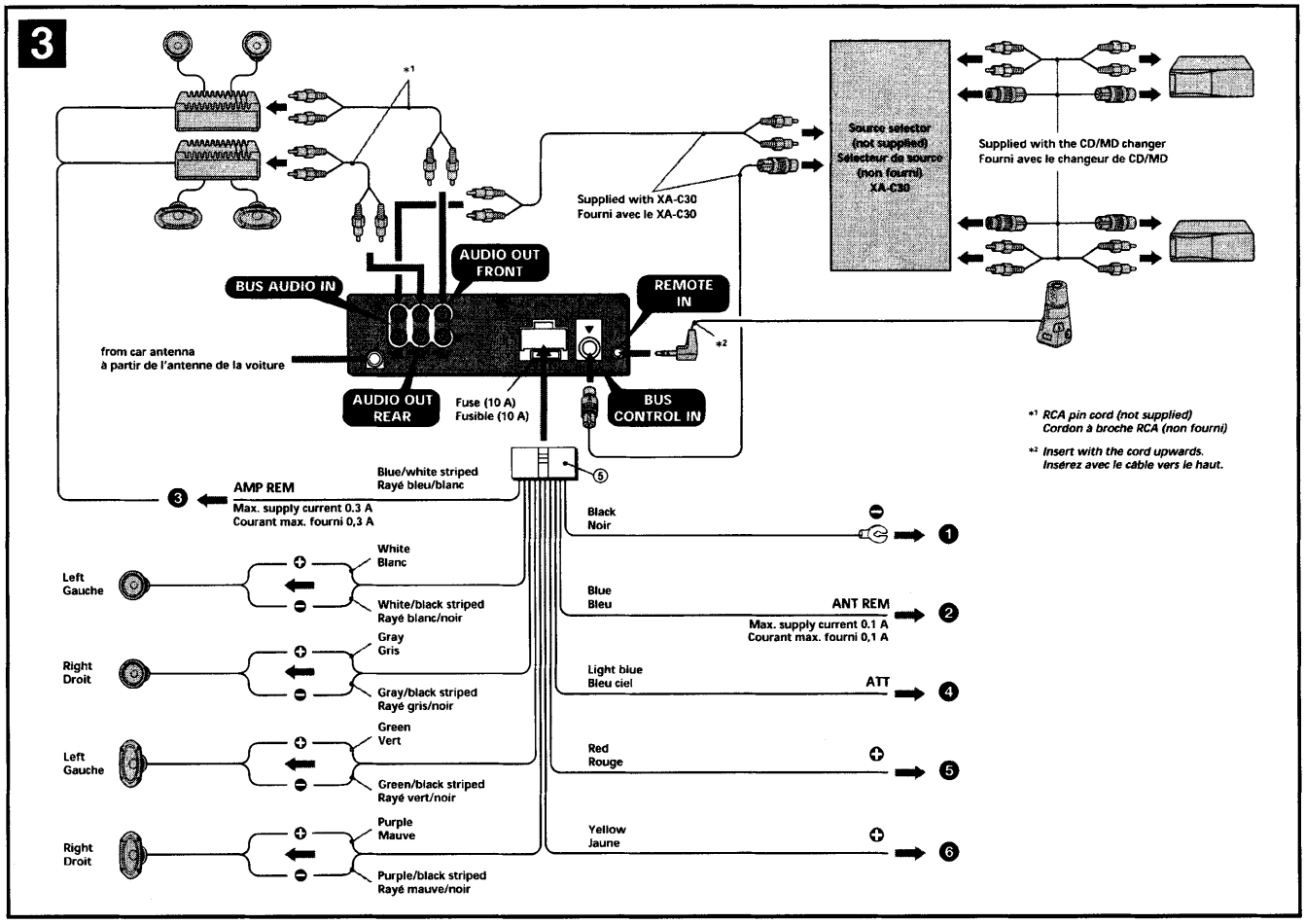

Connection diagram (3)

1 To a metal surface of the car
First connect the black ground lead, then connect the yellow and red power input leads.

2 To the power antenna control lead or power supply lead of antenna booster amplifier
Notes
- *It is not necessary to connect this lead if there is no power antenna or antenna booster, or with a manually-operated telescopic antenna.*
- *When your car has a built-in FM/AM antenna in the rear/side glass, see "Notes on the control and power supply leads."*

3 To AMP REMOTE IN of an optional power amplifier
This connection is only for amplifiers. Connecting any other system may damage the unit.

4 To the interface cable of a car telephone

5 To the +12 V power terminal which is energized in the accessory position of the ignition key switch
Notes
- *If there is no accessory position, connect to the +12 V power (battery) terminal which is energised at all times.*
  Be sure to connect the black ground lead to it first.
- *When your car has a built-in FM/AM antenna in the rear/side glass, see "Notes on the control and power supply leads."*

6 To the +12 V power terminal which is energised at all times
Be sure to connect the black ground lead to it first.

Notes on the control and power supply leads
- *The power antenna control lead (blue) supplies +12 V DC when you turn on the tuner.*
- *When your car has built-in FM/AM antenna in the rear/side glass, connect the power antenna control lead (blue) or the accessory power input lead (red) to the power terminal of the existing antenna booster. For details, consult your dealer.*
- *A power antenna without relay box cannot be used with this unit.*

Memory hold connection
When the yellow power input lead is connected, power will always be supplied to the memory circuit even when the ignition key is turned off.

Notes on speaker connection
- *Before connecting the speakers, turn the unit off.*
- *Use speakers with an impedance of 4 to 8 ohms, and with adequate power handling capacities to avoid its damage.*
- *Do not connect the speaker terminals to the car chassis, or connect the terminals of the right speakers with those of the left speaker.*
- *Do not connect the ground lead of this unit to the negative (–) terminal of the speaker.*
- *Do not attempt to connect the speakers in parallel.*
- *Connect only passive speakers. Connecting active speakers (with built-in amplifiers) to the speaker terminals may damage the unit.*
- *To avoid a malfunction, do not use the built-in speaker wires installed in your car if the unit shares a common negative (–) lead for the right and left speakers.*
- *Do not connect the unit's speaker cords to each other.*

Schéma de raccordement (3)

1 à un point métallique de la voiture
Branchez d'abord le fil de masse noir et, ensuite, les fils d'entrée d'alimentation jaune et rouge.

2 vers le fil de commande de l'antenne électrique ou le fil d'alimentation de l'amplificateur d'antenne
Remarques
- *Il n'est pas nécessaire de raccorder ce fil s'il n'y a pas d'antenne électrique ni d'amplificateur d'antenne, ou avec une antenne télescopique manuelle.*
- *Si votre voiture est équipée d'une antenne FM/AM intégrée dans la vitre arrière/latérale, voir "Remarques sur les fils de commande et d'alimentation".*

3 au niveau du AMP REMOTE IN de l'amplificateur de puissance en option
Ce raccordement s'applique uniquement aux amplificateurs. Le branchement de tout autre système risque d'endommager l'appareil.

4 vers le cordon de liaison d'un téléphone de voiture

5 à la borne +12 V qui est alimentée quand la clé de contact est sur la position accessoires
Remarques
- *S'il n'y a pas de position accessoires, raccordez la borne d'alimentation (batterie) +12 V qui est alimentée en permanence.*
  Raccordez d'abord le fil de masse noir.
- *Si votre voiture est équipée d'une antenne FM/AM intégrée dans la vitre arrière/latérale, voir "Remarques sur les fils de commande et d'alimentation".*

6 à la borne +12 V qui est alimentée en permanence
Raccordez d'abord le fil de masse noir.

Remarques sur les fils de commande et d'alimentation
- *Le fil de commande de l'antenne électrique (bleu) fournit une alimentation de + 12 V CC lorsque vous mettez la radio sous tension.*
- *Lorsque votre voiture est équipée d'une antenne FM/AM intégrée dans la vitre arrière/latérale, raccordez la sortie de commande de l'antenne (bleu) ou l'entrée d'alimentation des accessoires (rouge) à la borne de l'amplificateur d'antenne existant. Pour plus de détails, consultez votre détaillant.*
- *Une antenne électrique sans boitier de relais ne peut pas être utilisée avec cet appareil.*

Raccordement pour la conservation de la mémoire
Lorsque le fil d'entrée d'alimentation jaune est raccordé, le circuit de la mémoire est alimenté en permanence même si la clé de contact est sur la position d'arrêt.

Remarques sur le raccordement des haut-parleurs
- *Avant de raccorder les haut-parleurs, mettez l'appareil hors tension.*
- *Utilisez des haut-parleurs ayant une impédance de 4 à 8 ohms avec une capacité électrique adéquate pour éviter de les endommager.*
- *Ne raccordez pas les bornes du système de haut-parleur au châssis de la voiture et ne raccordez pas les bornes du haut-parleur droit à celles du haut-parleur gauche.*
- *Ne raccordez pas le câble de masse de cet appareil à la borne négative (–) de l'enceinte.*
- *N'essayez pas de raccorder les haut-parleurs en parallèle.*
- *Raccordez uniquement des haut-parleurs passifs. Le raccordement de haut-parleurs actifs (avec amplificateurs intégrés) aux bornes des haut-parleurs peut endommager l'appareil.*
- *Pour éviter tout dysfonctionnement, n'utilisez pas les fils des haut-parleurs intégrés installés dans votre voiture si l'appareil partage un fil négatif commun (–) pour les haut-parleurs droit et gauche.*
- *Ne raccordez pas entre eux les cordons des haut-parleurs de l'appareil.*

SECTION 2
DISASSEMBLY

Note : This set can be disassemble according to the following sequence.

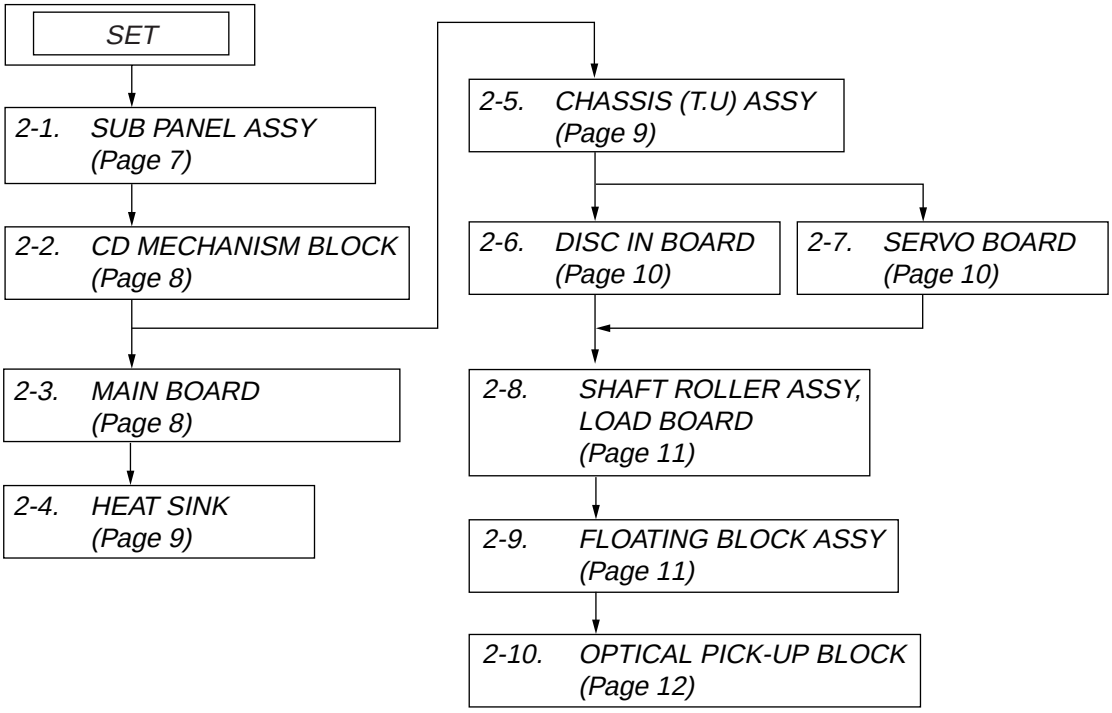

Note : Follow the disassembly procedure in the numerical order given.

2-1. SUB PANEL ASSY

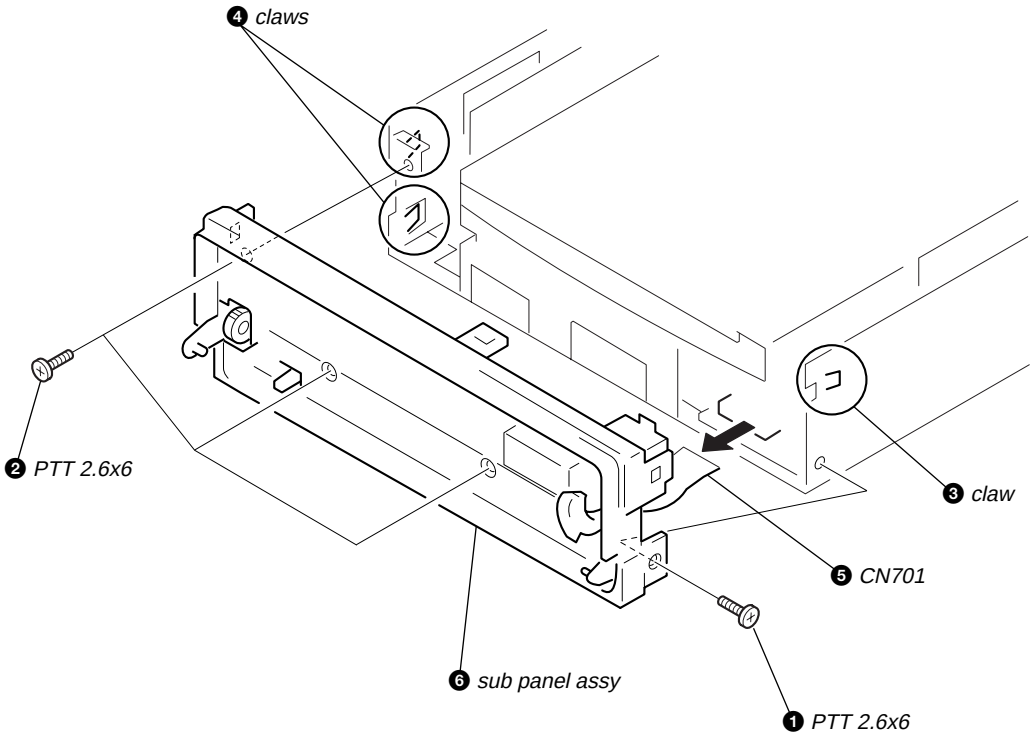

2-2. CD MECHANISM BLOCK

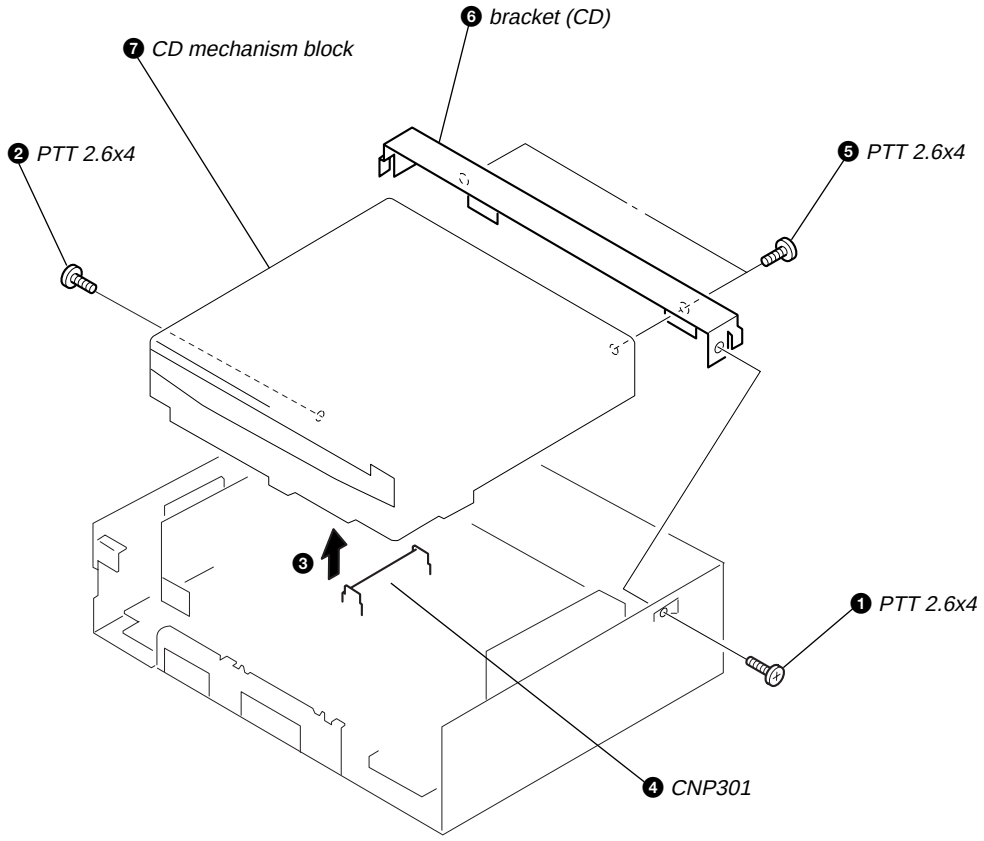

2-3. MAIN BOARD

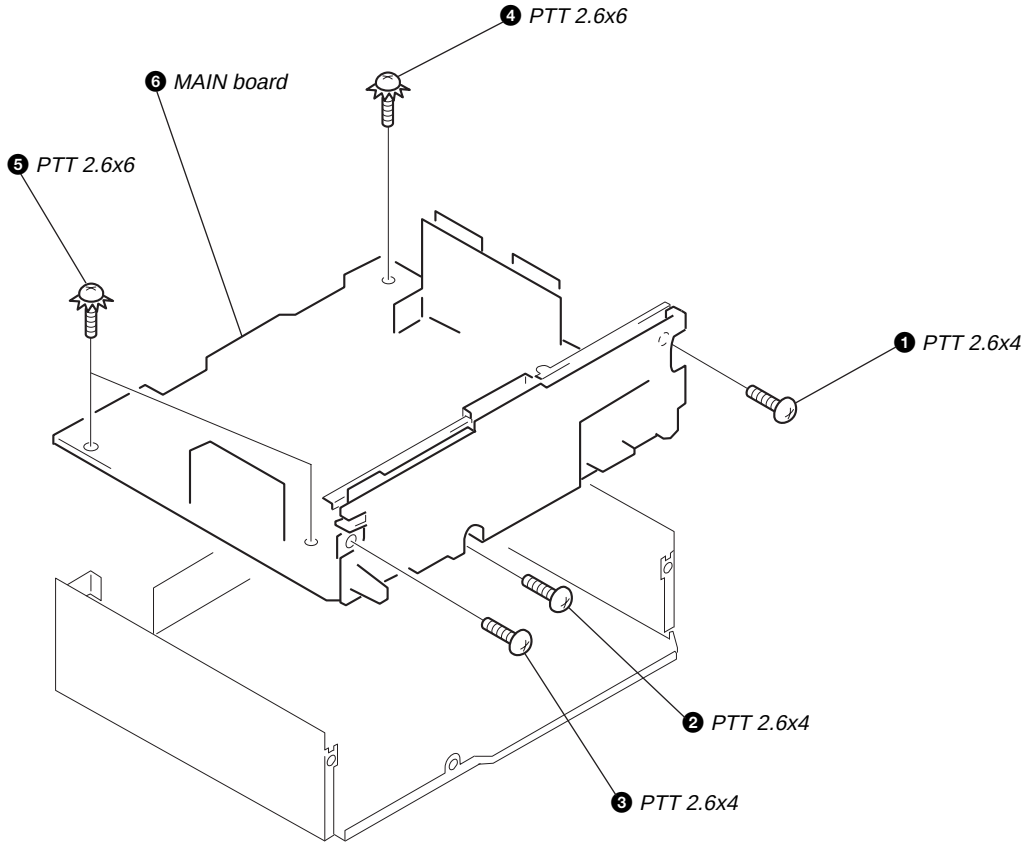

2-4. HEAT SINK

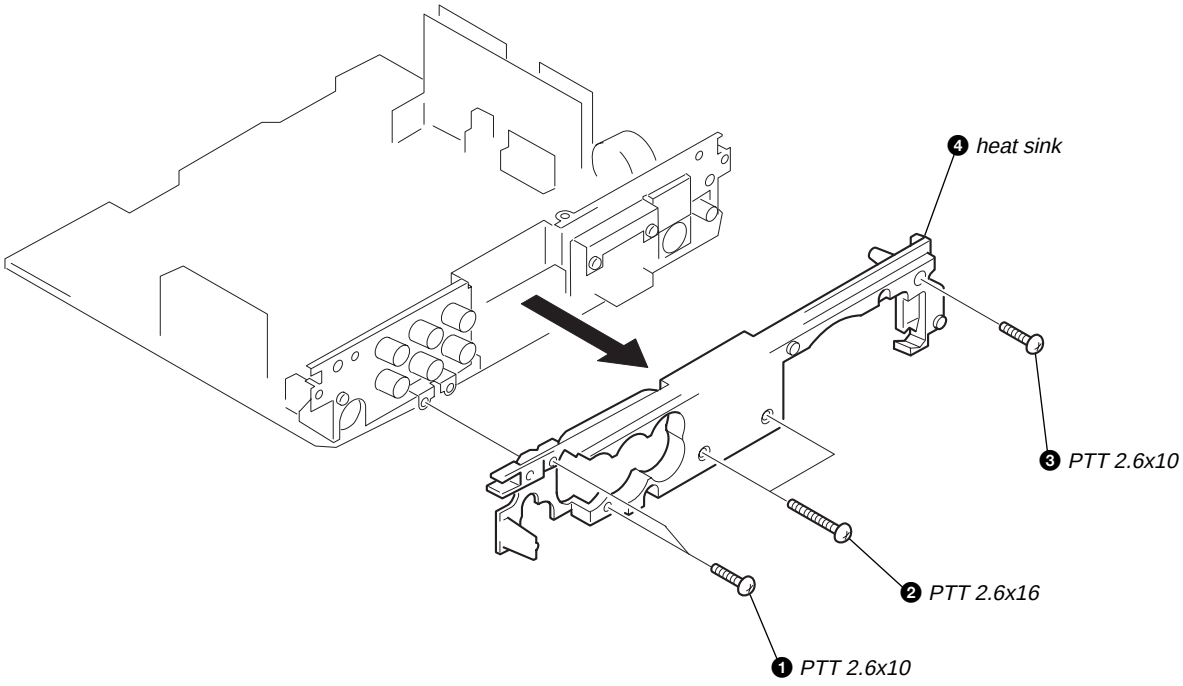

2-5. CHASSIS (T.U) ASSY

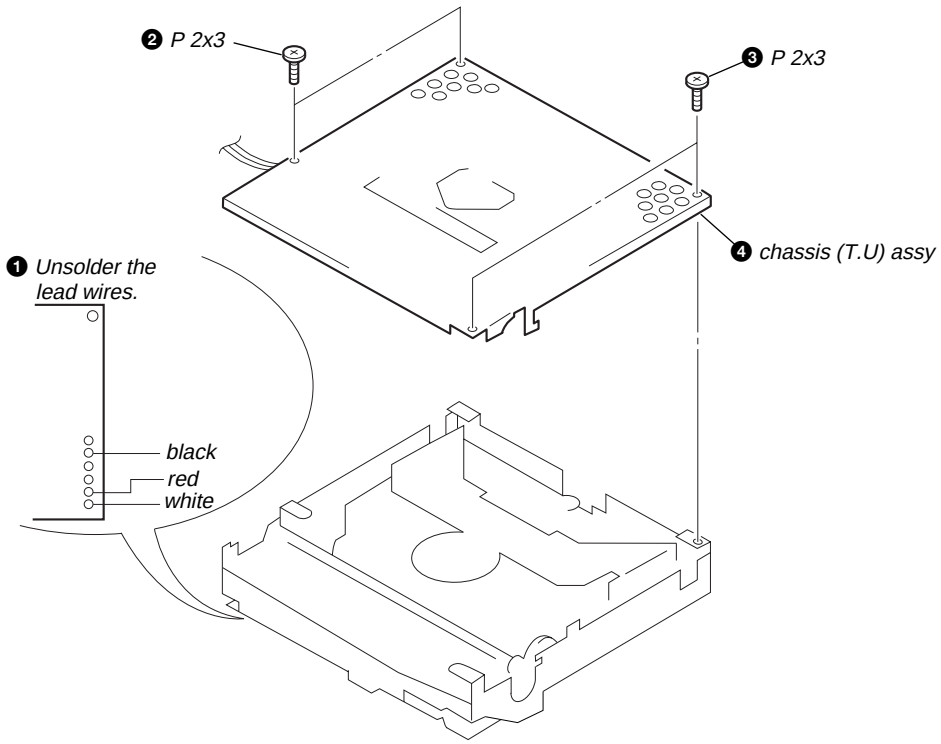

2-6. DISC IN BOARD

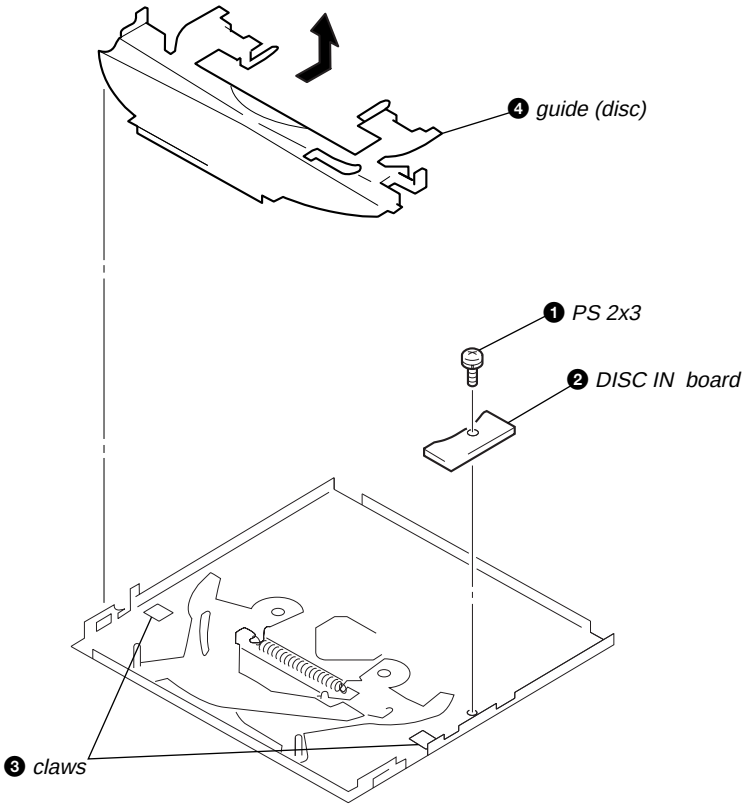

2-7. SERVO BOARD

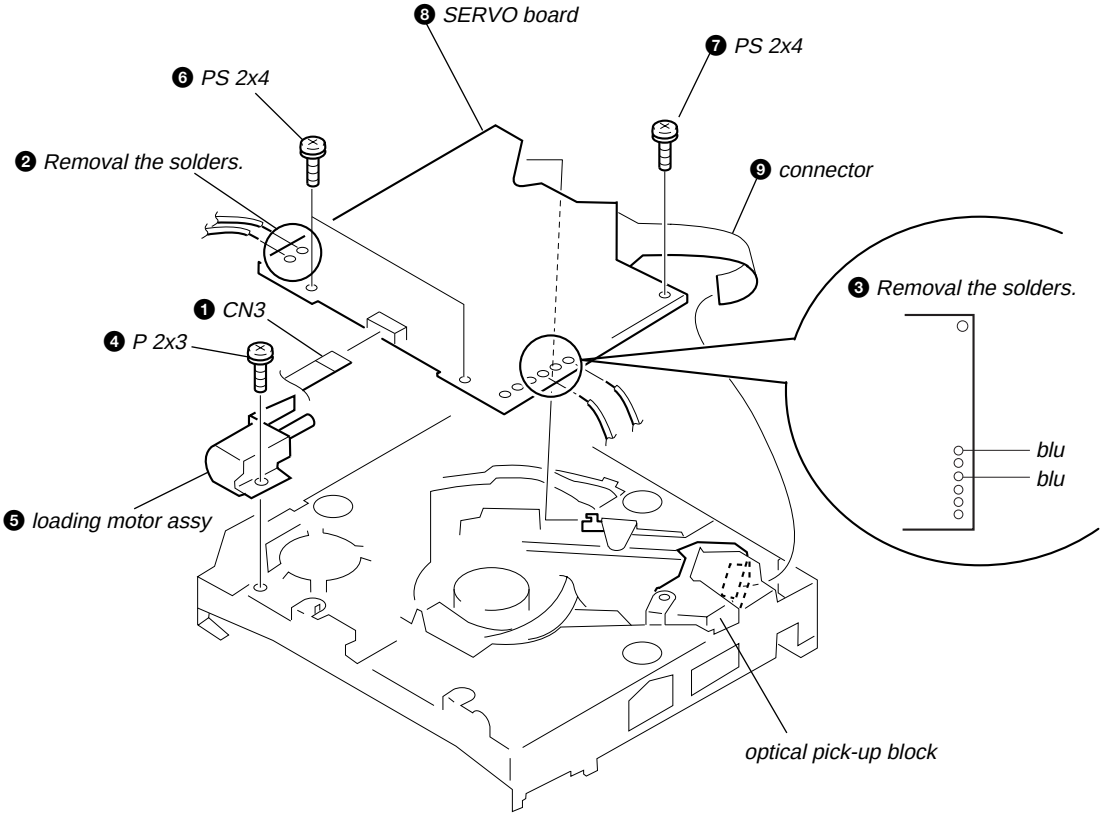

2-8. SHAFT ROLLER ASSY, LOAD BOARD

• When installing, take note of the positions arm (roller) and washers. (Fig. 1)

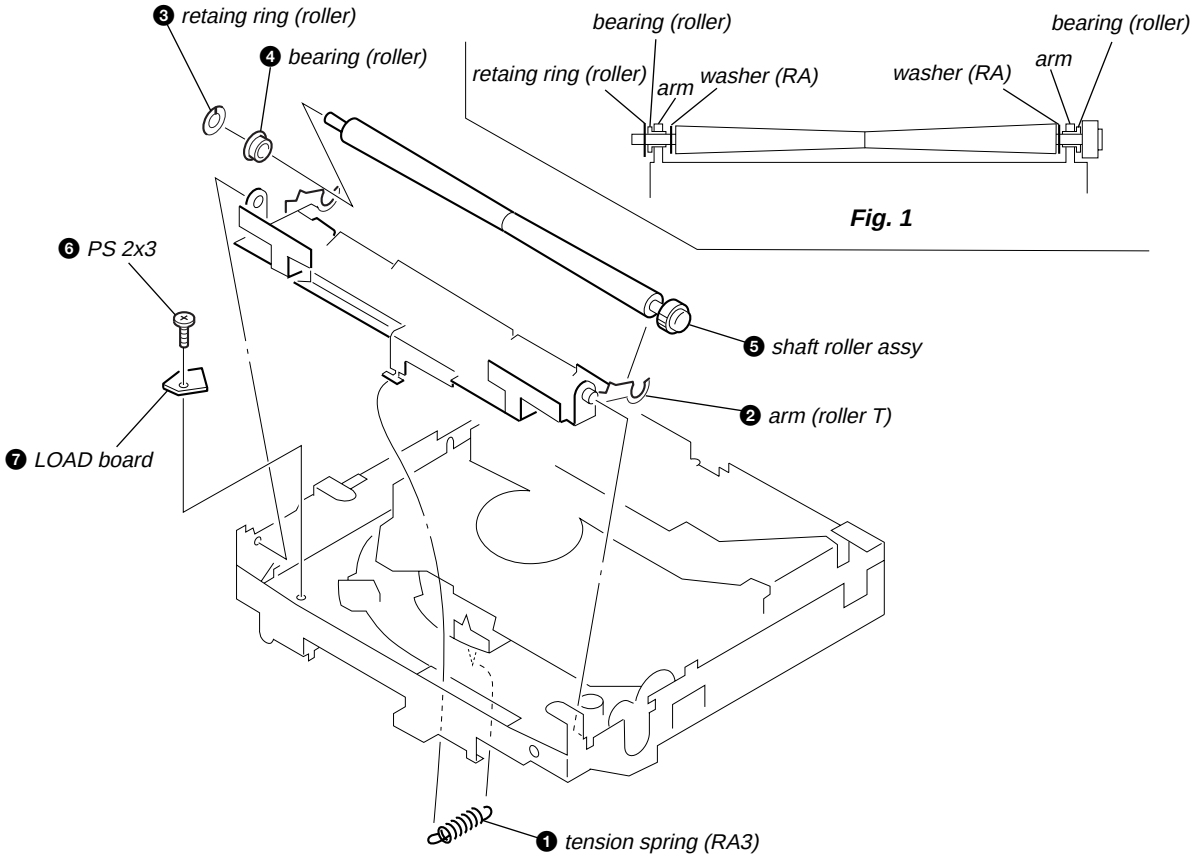

2-9. FLOATING BLOCK ASSY

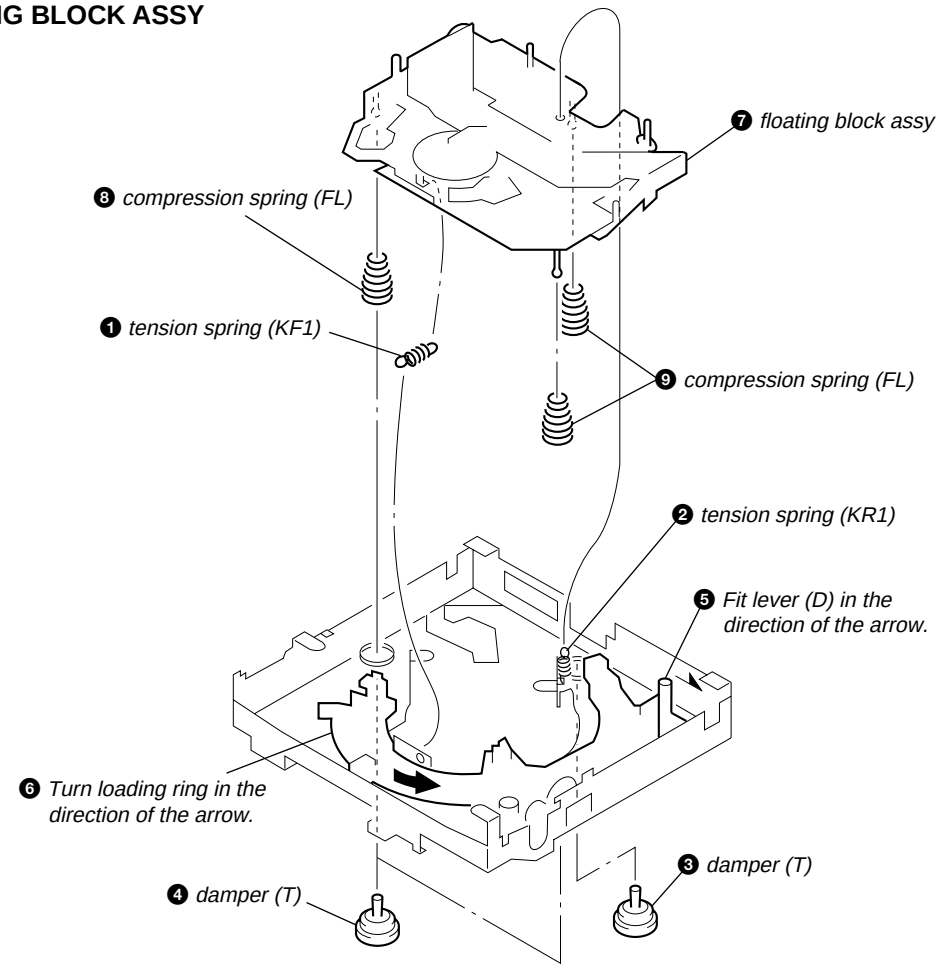

2-10. OPTICAL PICK-UP BLOCK

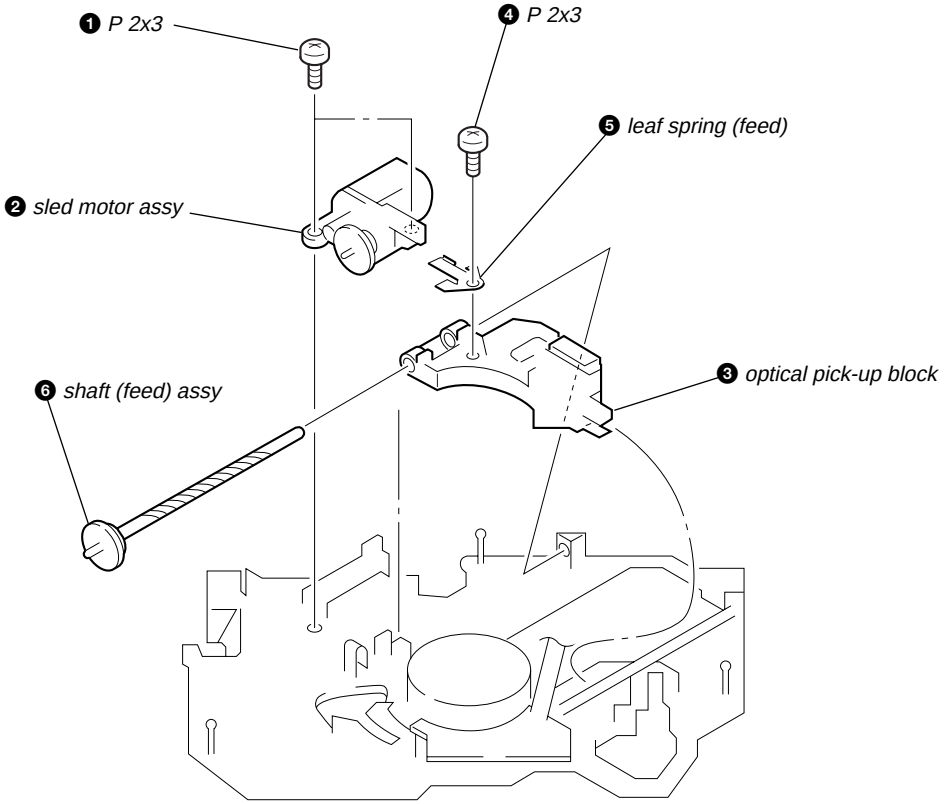

SECTION 3
DIAGRAMS

3-1. IC PIN DESCRIPTION

• IC501 MN101C49KCY2 (SYSTEM CONTROL)

Pin No.	Pin Name	I/O	Pin Description
1	VREF–	—	Ground for A/D converter power supply
2	VSM	I	S-meter voltage detection signal input from tuner unit (TU10)
3	NIL	I	Connect to ground.
4	KEYIN1	I	Key signal input
5	KEYIN0	I	Key signal input
6	RC IN0	I	Rotary commander key signal input from remote in jack (J561)
7	QUALITY	I	Noise detection signal input Connect to ground in this set.
8	NIL/MPTH	I	Connect to ground in this set. Multi path detection signal input
9	DSTSEL/FUNCSEL	I	Destination set up detection signal input
10	VREF	—	A/D converter power supply
11	VDD	—	Power supply (+5 V) input pin
12	OSCOUT	O	High speed clock signal output (18.432 MHz)
13	OSCIN	I	High speed clock signal input (18.432 MHz)
14	VSS	—	Ground for power supply
15	XIN	I	Low speed clock signal input (32.768 kHz)
16	XOUT	O	Low speed clock signal output (32.768 kHz)
17	MMOD	I	Memory mode select signal input (Input to “Low” (single chip mode).) (Connect to ground.)
18	LCDSO	O	LCD serial data signal output to LCD driver (IC901)
19	LCDCE	O	LCD chip enable signal output to LCD driver (IC901)
20	LCDCKO	O	LCD serial clock signal output to LCD driver (IC901)
21	CD TSO	O	CD servo IC serial data signal output
22	CD TSI	I	CD servo IC serial data signal input
23	CD TCKO	O	CD servo IC serial clock signal output
24	$\overline{\text{SYSRST}}$	O	System reset signal output to bus interface (IC581)
25	$\overline{\text{BUS ON}}$	O	Bus on signal output to bus interface (IC581)
26	KEYACK	I	Key acknowledge detection signal input
27	NIL/DAVN	I	Connect to ground in this set. RDS data block synchronization detection signal input
28	BU IN	I	Back up power supply detection signal input
29	SIRCS	I	Remote signal input from remote control receiver (IC971)
30	CD SELFSW	I	CD mechanism self load position detection switch signal input from self switch (SW2)
31	CD PACK	I	CD text pack sync signal input from CD servo (IC1)
32	VDD2	—	Power supply (+5 V) pin
33	$\overline{\text{RESET}}$	I	microcomputer reset signal input from reset IC (IC551) “L”: reset
34	$\overline{\text{NOSE SW}}$	I	Front panel attachment detection signal input from nose detect switch (S552) “L”: ON
35	BEEP	O	Beep signal output to power amp (IC751)
36	NCO	O	Not used. (Open)
37	$\overline{\text{TESTIN}}$	I	Test mode detection signal input
38	$\overline{\text{ACCIN}}$	I	Accessory power supply detection signal input
39	NCO (VCC)	O	Not used. (Open)
40	TELATT	I	Telephone ATT detection signal input
41	NCO (VCC)	I	Connect to power supply.
42	UNISO	O	Sony-Bus serial data signal output to bus interface (IC581)
43	UNISI	I	Sony-Bus serial data signal input from bus interface (IC581)
44	UNICKO	O	Sony-Bus serial clock signal output to bus interface (IC581)
45	I2C SIO	I/O	I2C bus serial data signal input/output
46	NCO	O	Not used. (Open)
47	I2C CKO	O	I2C bus serial clock signal output
48	NCO	O	Not used. (Open)

Pin No.	Pin Name	I/O	Pin Description
49	TUNON	O	Tuner power supply control signal output to power supply (IC601)
50	PW ON	O	System power supply control signal output to power supply (IC601)
51	TSTB	O	CD text parameter strob signal output to servo IC (IC1)
52	RFOK	I	RF OK signal input from servo IC (IC1)
53	CD RST	O	Reset signal output to servo IC (IC1)
54	A0	O	Command/parameter identification signal output to servo IC (IC1) “L”: Command, “H”: Parameter
55	STB	O	Data strob signal output to servo IC (IC1)
56	X EN	O	Crystal oscillation control signal output Not used in this set.
57	LIMIT	I	CD Mechanism in-limit switch signal input from limit switch (SW3)
58	PH1	I	CD Mechanism PH1 detection signal input Not used in this set.
59	D SW	I	CD Mechanism down switch signal input from down switch (SW4)
60	INSW/PH2	I	CD Mechanism disc-in switch detection signal input from disc-in switch (SW1)
61	NC (PH3)	I	CD Mechanism PH3 detection signal input Not used in this set.
62	CD LM LO	O	CD Mechanism loading motor control signal output to loading motor drive (IC2)
63	CD LM EJ	O	CD Mechanism eject motor control signal output to loading motor drive (IC2)
64	4VPRE/NCO	I/O	Hi-Volt power selection “L”: with, “H”: without
65	PREOUTMENU/NCO	I/O	Pre-out (4 V/5.5 V) menu selection “L”: with, “H”: without set up signal input
66	$\overline{\text{AMPATT}}$	O	Power amp ATT control signal output to power amp (IC751)
67	AMPON	O	Power amp standby control signal output to power amp (IC751)
68	CDMD ON	O	CD mechanism deck power supply control signal output
69	ATT	O	System ATT control signal output
70	$\overline{\text{VOLATT}}$	O	Electrical volume ATT control signal output to electrical volume (IC331)
71 – 73	NCO	O	Not used. (Open)
74	MP3SEL	I	MP3 control select signal input “L”: MP3 CD changer control correspondence, “H”: not correspondence
75	SUB SEL	I	Sub-out function detection signal input “H”: without, “L”: with
76	SW SHIFT	O	Not used in this set. (Open)
77	COLSEL	I	Key illumination color selection detection signal input “L”: amber, “H”: green
78	NCO	O	Not used. (Open)
79	XCD ON	O	CD on signal output “H”: Play, “L”: Loading or standby
80 – 85	NCO	O	Not used. (Open)
86	E2P SIO	I/O	EEPROM serial data signal input/output
87	E2P CKO	O	EEPROM serial clock signal output
88	NCO	O	Not used. (Open)
89	FLASH W	I	Flash microcomputer write detection signal input “L”: Write mode
90	NIL/NS MASK	O	Connect to ground in this set. Noise mask signal output
91	$\overline{\text{AD ON}}$	O	Key power supply control signal output “L”: key active
92	DOORIND	O	Sub panel power supply control signal output
93	ILLON	O	Illumination power supply control signal output
94	$\overline{\text{DOOR SW}}$	I	Front panel open/close detection signal input “L”: Close, “H”: Open
95	DAVSS	—	Ground pin
96	RE IN1	I	Rotary encoder signal input from rotary encoder (RE901)
97	RE IN0	I	Rotary encoder signal input from rotary encoder (RE901)
98	RC IN1	I	Rotary commander shift key signal input from remote in jack (J561) “L”: Shift key on
99	NCO	O	Not used. (Connect to ground.)
100	DAVDD	—	Power supply pin (+5 V)

3-2. BLOCK DIAGRAM — CD SECTION —

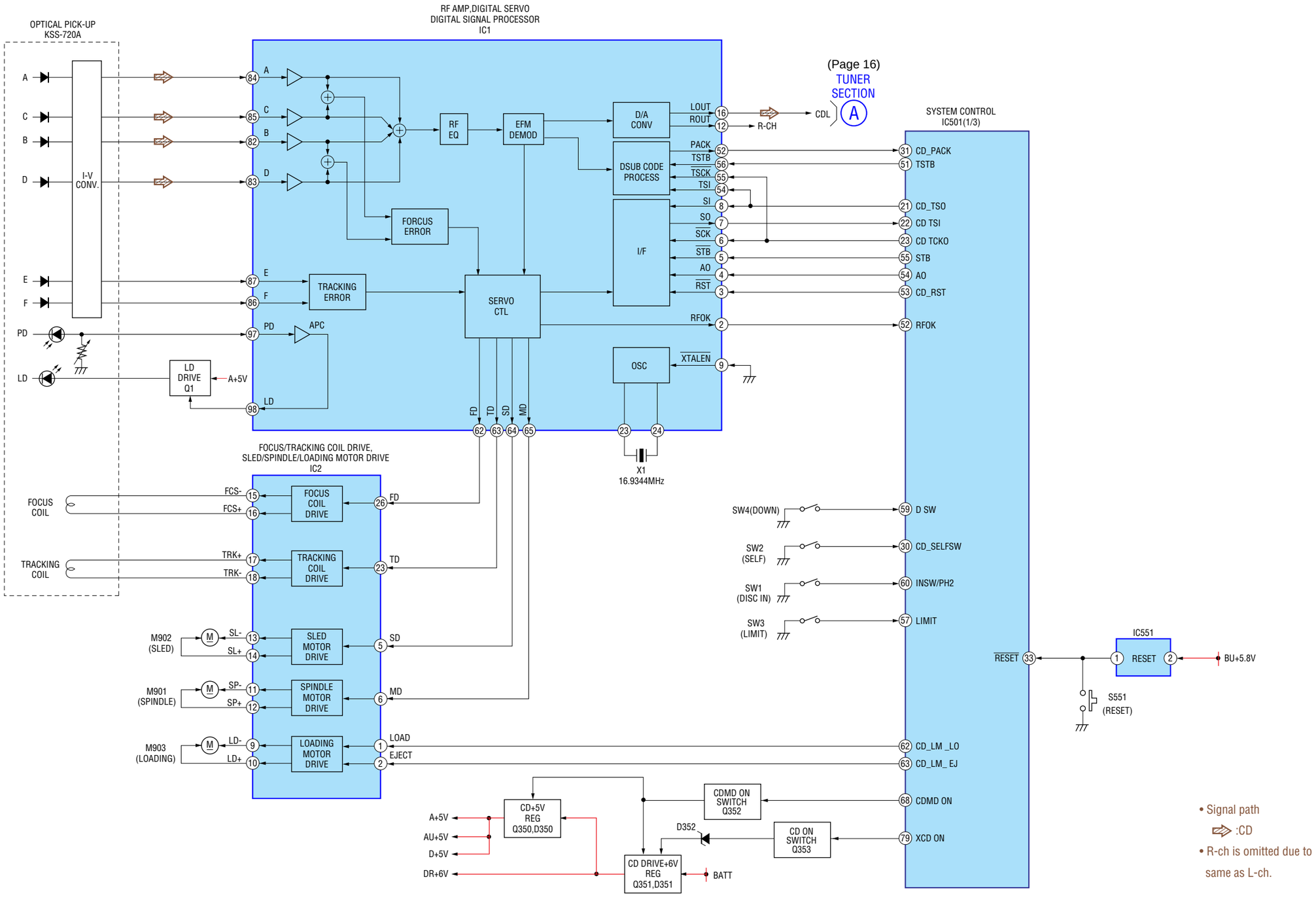

3-3. BLOCK DIAGRAM — TUNER SECTION —

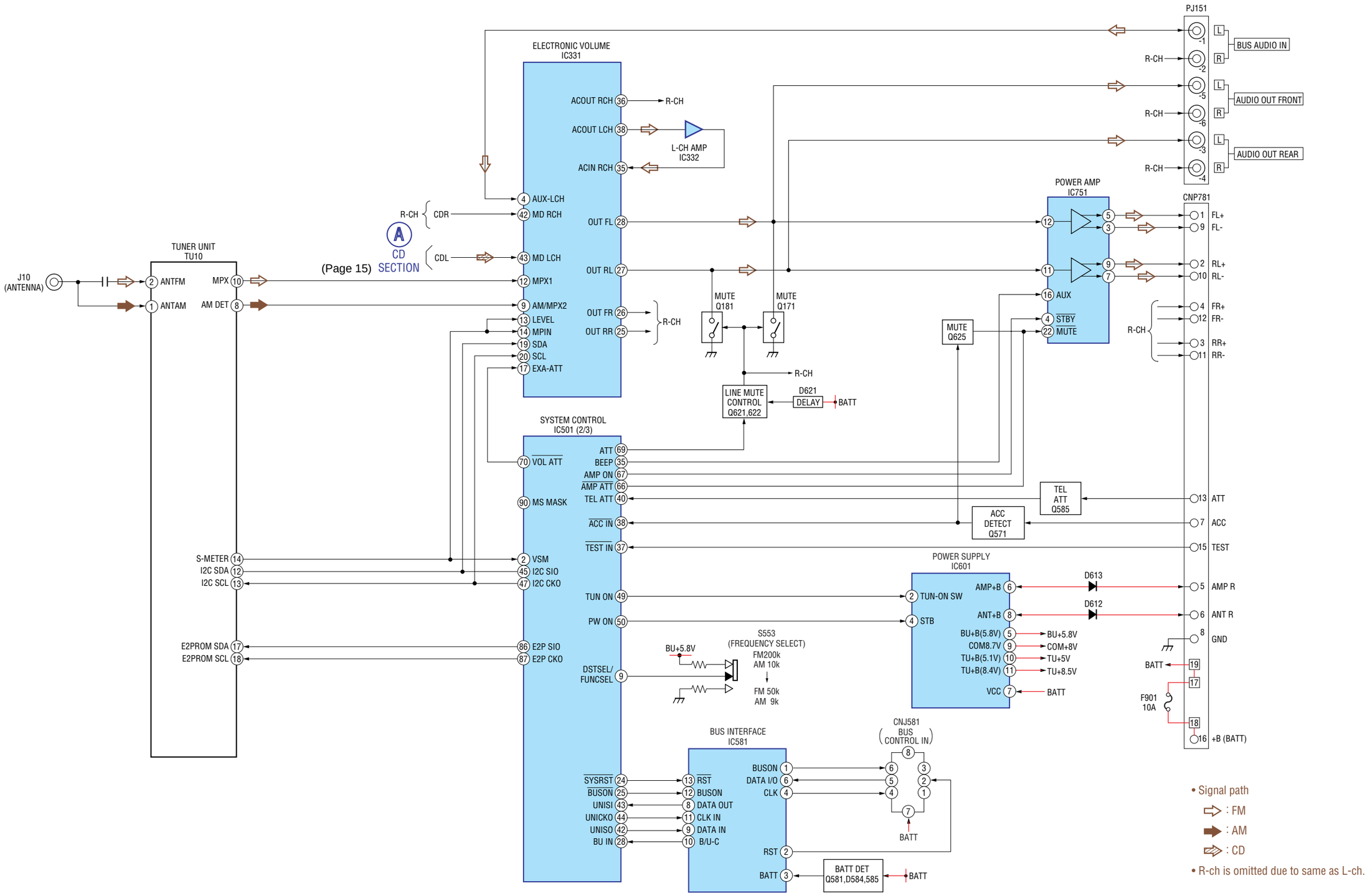

3-4. BLOCK DIAGRAM — DISPLAY SECTION —

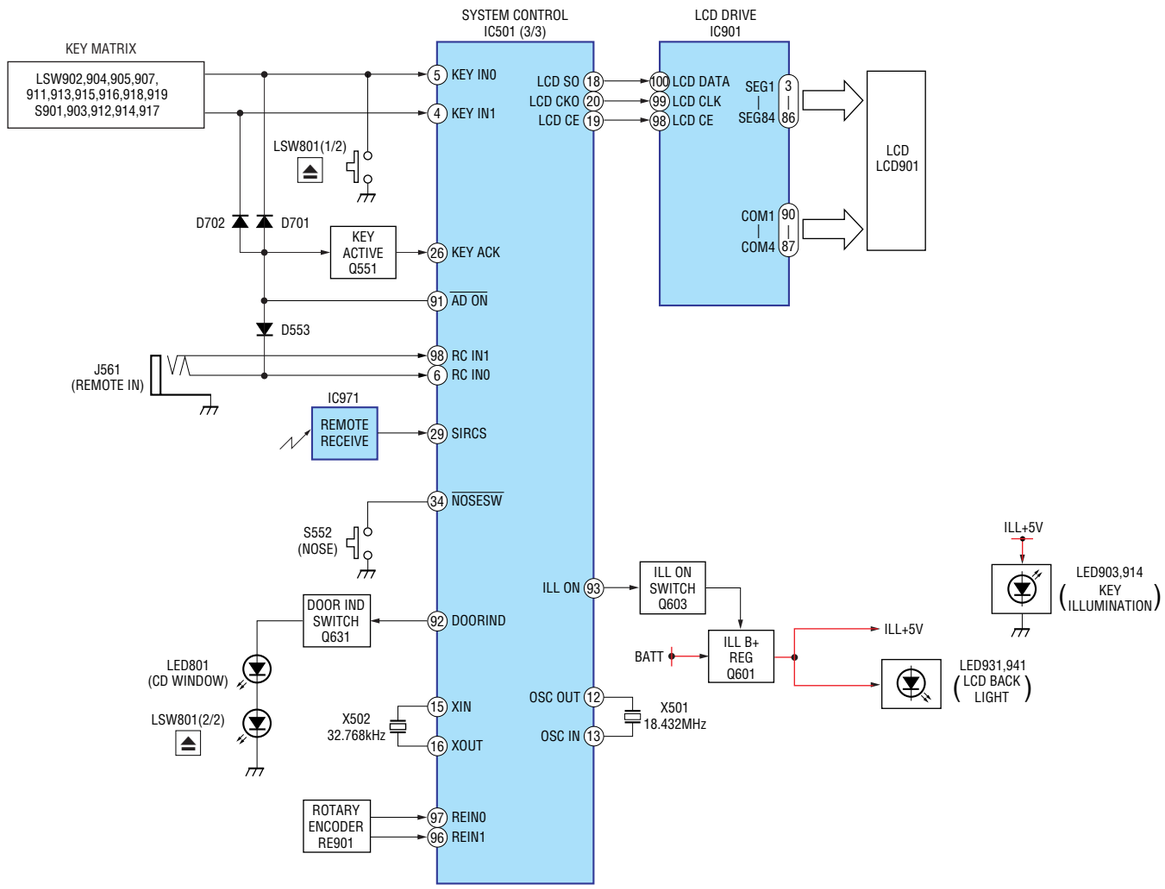

3-5. CIRCUIT BOARDS LOCATION

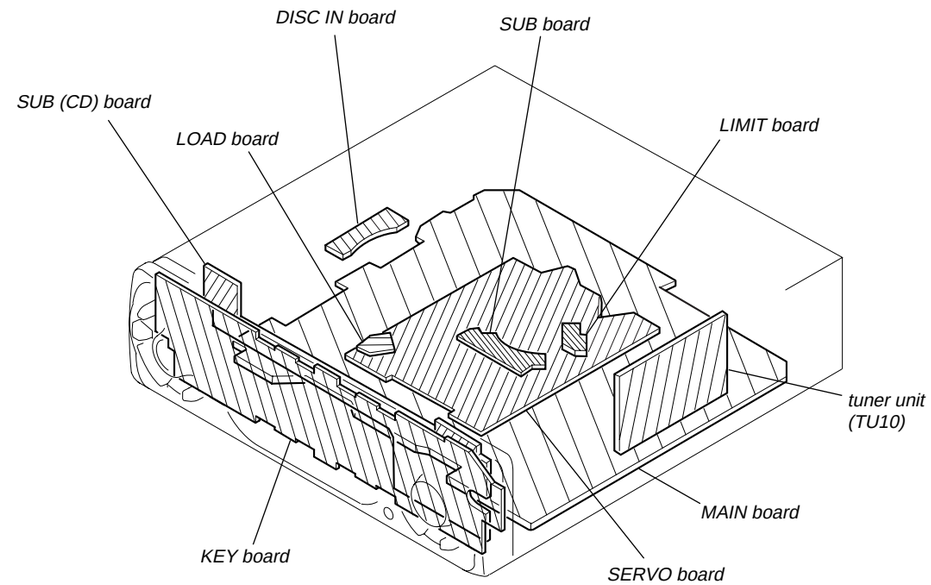

• **Waveforms**

— Servo Board —

(MODE: CD PLAY)

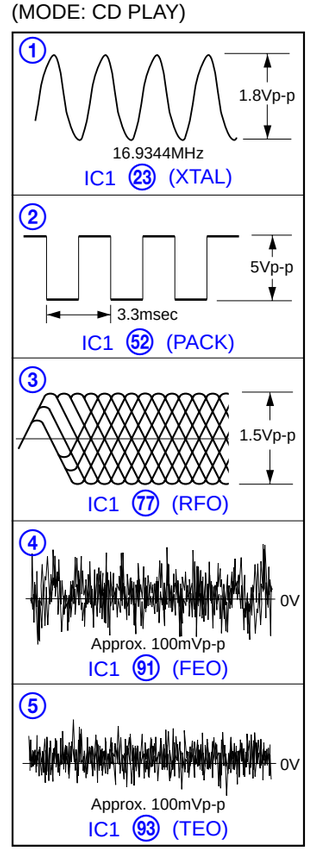

— Main Board —

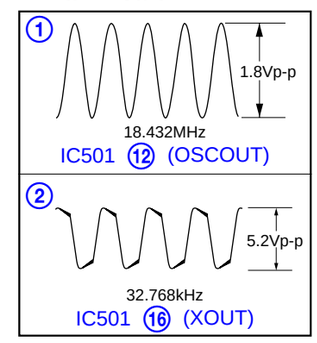

17

3-6. PRINTED WIRING BOARDS — CD MECHANISM SECTION — • Refer to page 17 for Circuit Boards Location.

THIS NOTE IS COMMON FOR PRINTED WIRING BOARDS AND SCHEMATIC DIAGRAMS.
(In addition to this, the necessary note is printed in each block.)

for schematic diagram:
- All capacitors are in µF unless otherwise noted. pF: µµF 50 WV or less are not indicated except for electrolytics and tantalums.
- All resistors are in Ω and 1/4 W or less unless otherwise specified.
- % : indicates tolerance.
- △ : internal component.
- ▭ : panel designation.

Note: The components identified by mark ⚠ or dotted line with mark ⚠ are critical for safety.
Replace only with part number specified.

- ▬ : B+ Line.
- Power voltage is dc 14.4V and fed with regulated dc power supply from ACC and BATT cords.
- Voltages are taken with a VOM (Input impedance 10 MΩ). Voltage variations may be noted due to normal production tolerances.
- Waveforms are taken with a oscilloscope. Voltage variations may be noted due to normal production tolerances.
- Circled numbers refer to waveforms.
- Signal path.
  - ⇨ : FM
  - ➡ : AM
  - ⇨ : CD

for printed wiring boards:
- ○——— : parts extracted from the component side.
- ——— : parts extracted from the conductor side.
- ■ : parts mounted on the conductor side.
- ○ : Through hole.
- ▬ : Pattern from the side which enables seeing. (The other layer's patterns are not indicated.)

Caution:
Pattern face side: (Side B) Parts on the pattern face side seen from the pattern face are indicated.
Parts face side: (Side A) Parts on the parts face side seen from the parts face are indicated.

【SERVO BOARD】(SIDE B)

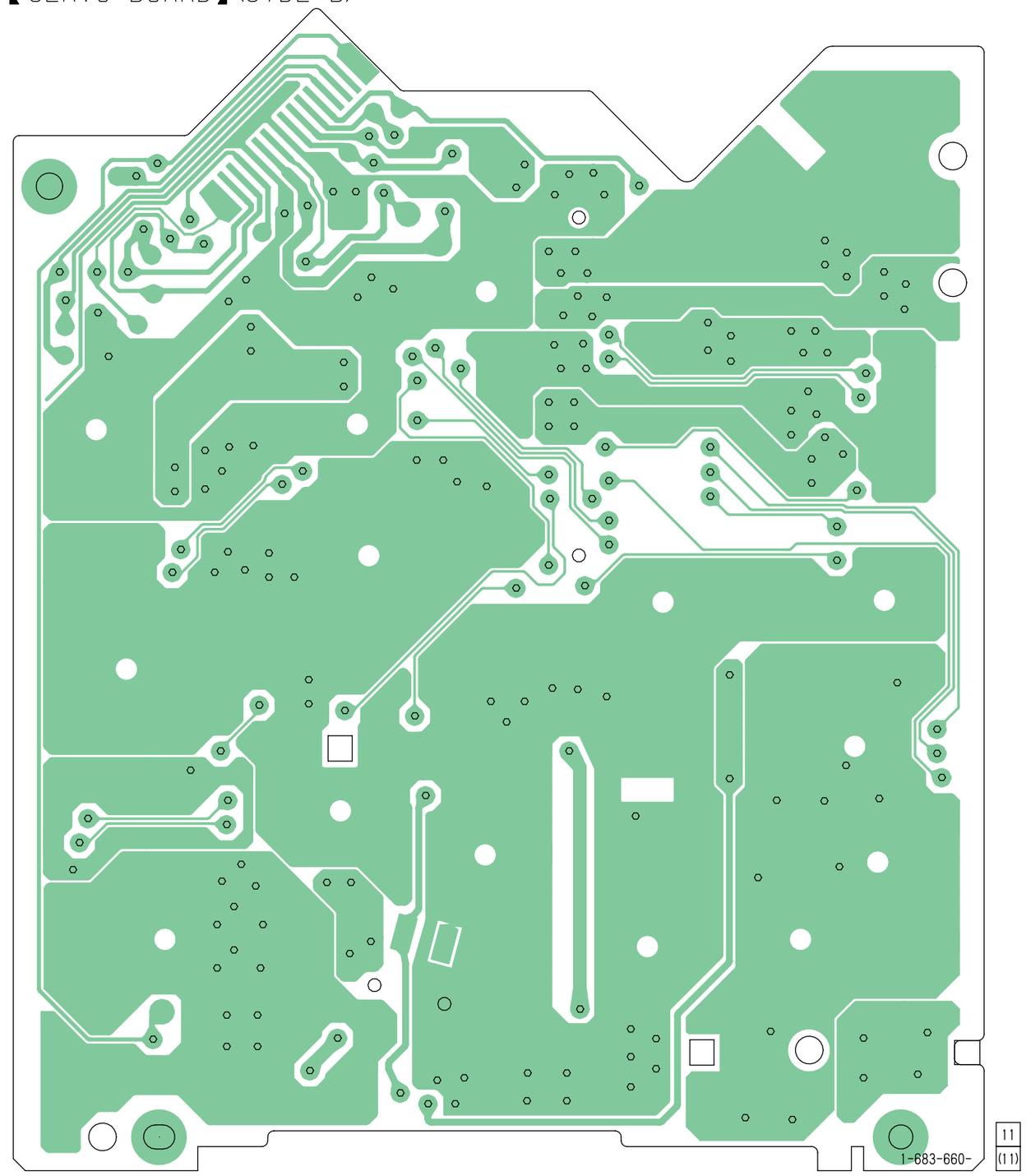

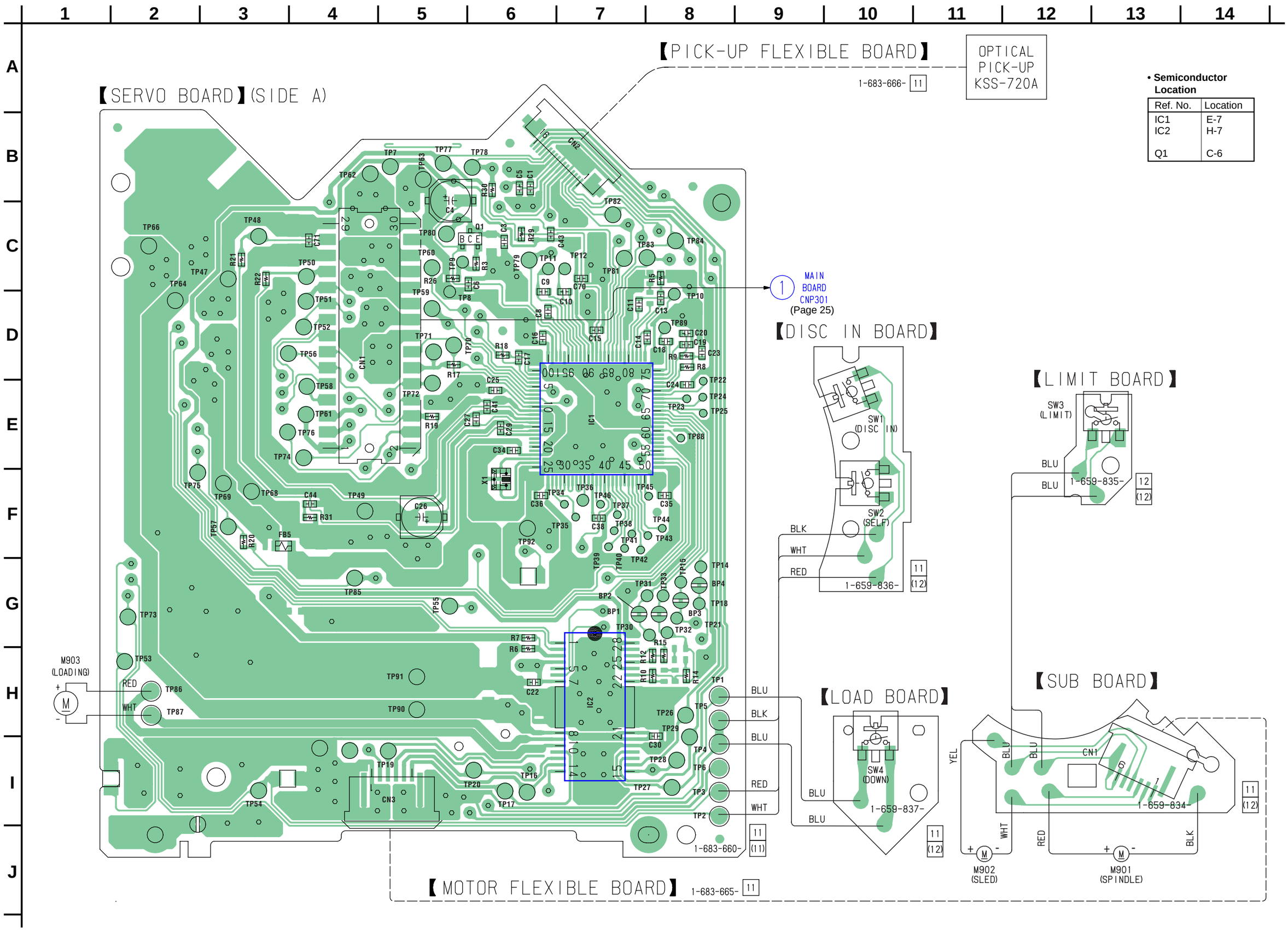

• **Semiconductor Location**

Ref. No.	Location
IC1	E-7
IC2	H-7
Q1	C-6

3-7. SCHEMATIC DIAGRAM — CD MECHANISM SECTION —

• Refer to page 17 for Waveforms.
• Refer to page 30 for IC Block Diagrams.

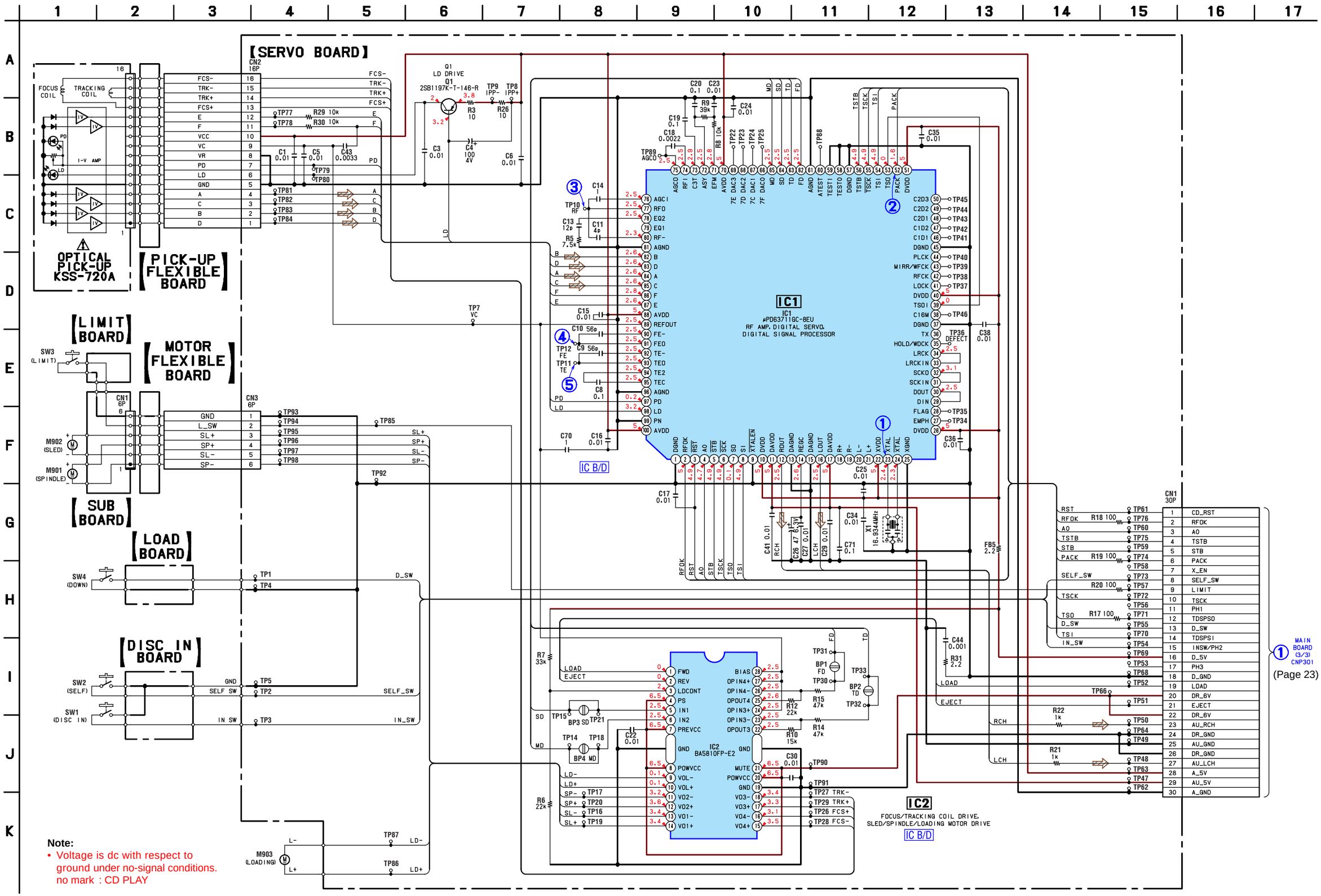

Note:
- Voltage is dc with respect to ground under no-signal conditions. no mark : CD PLAY

3-8. SCHEMATIC DIAGRAM — MAIN SECTION (1/3) — • Refer to page 31 for IC Block Diagrams.

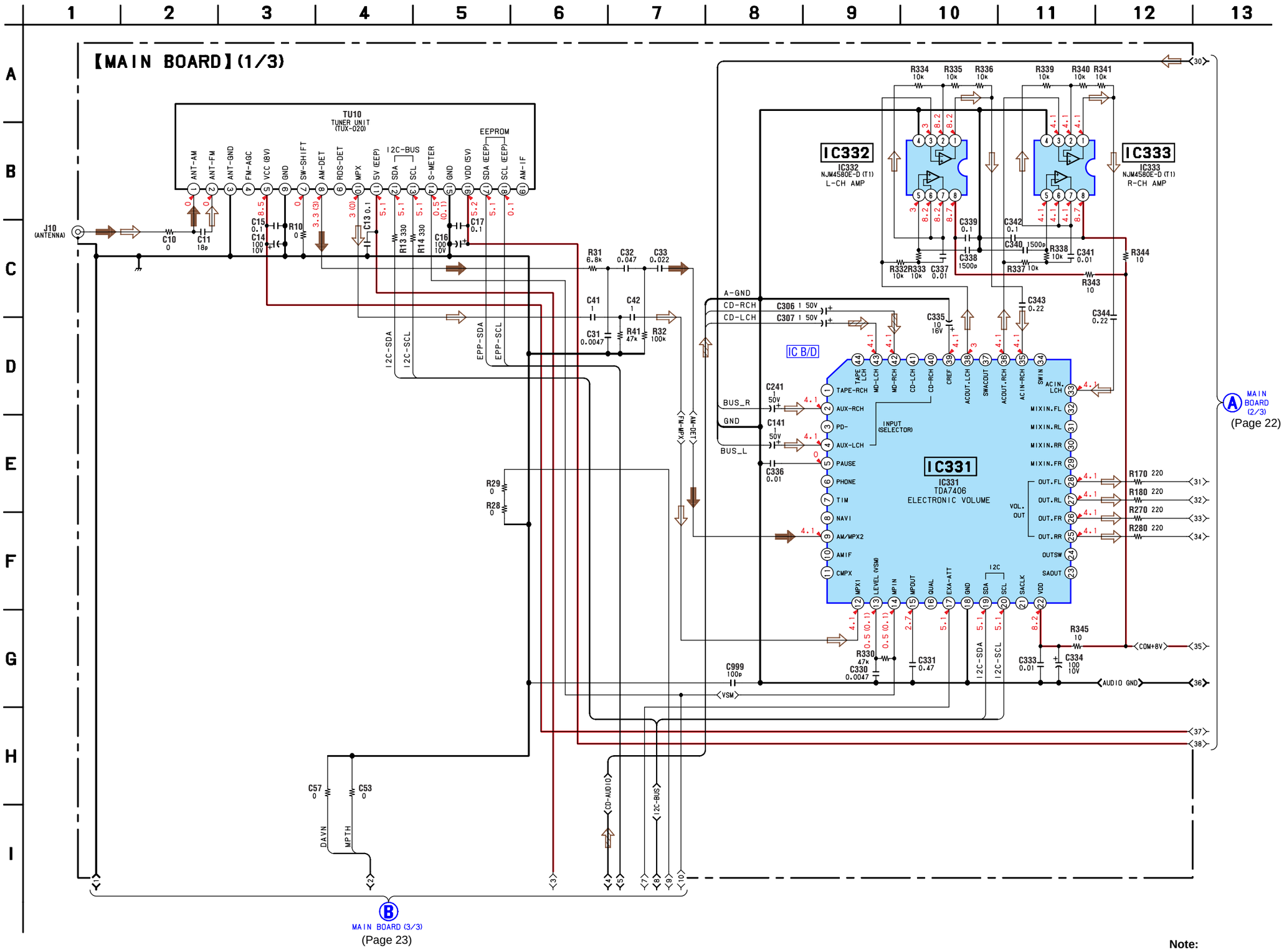

Note:
- Voltage is dc with respect to ground under no-signal (detuned) condition.
  no mark : FM
  ( ) : AM

3-9. SCHEMATIC DIAGRAM — MAIN SECTION (2/3) — • Refer to page 32 for IC Block Diagram.

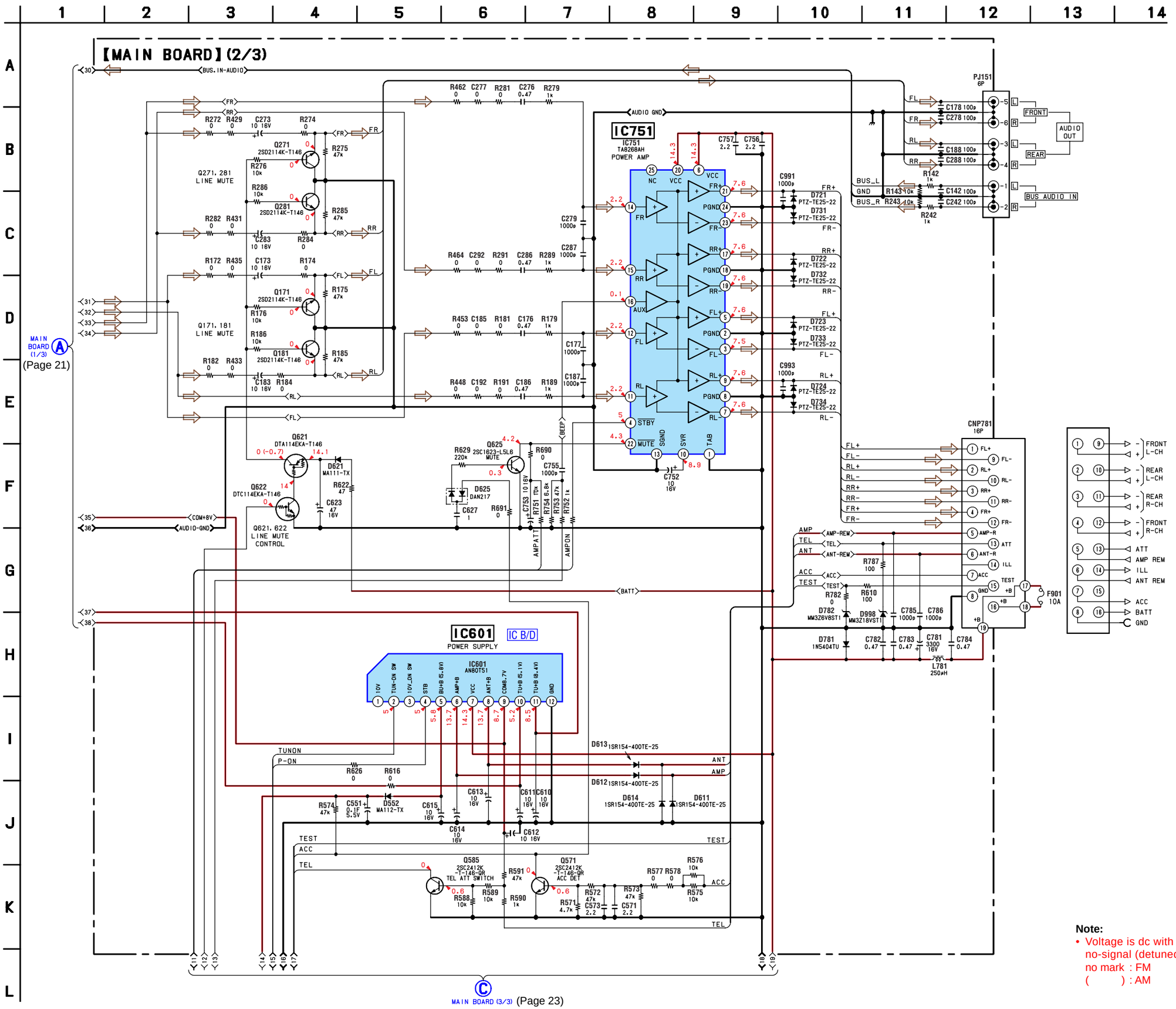

Note:
- Voltage is dc with respect to ground under no-signal (detuned) condition.
  no mark : FM
  ( ) : AM

3-10. SCHEMATIC DIAGRAM — MAIN SECTION (3/3) —

- Refer to page 17 for Waveforms.
- Refer to page 32 for IC Block Diagram.

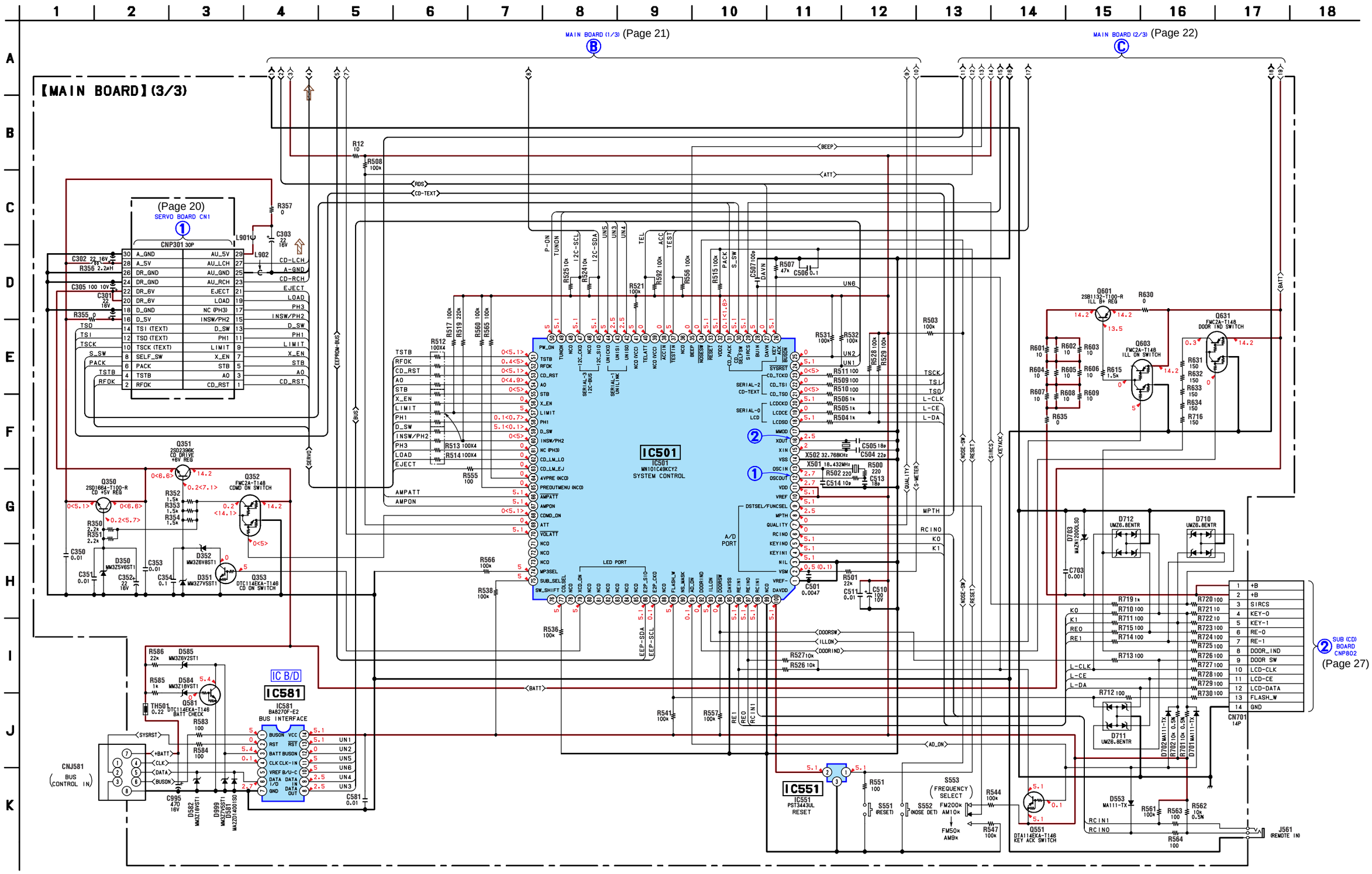

Note:

- Voltage is dc with respect to ground under no-signal (detuned) condition.
  no mark : FM
  ( ) : AM
  < > : CD PLAY

3-11. PRINTED WIRING BOARD — MAIN SECTION — • Refer to page 17 for Circuit Boards Location.

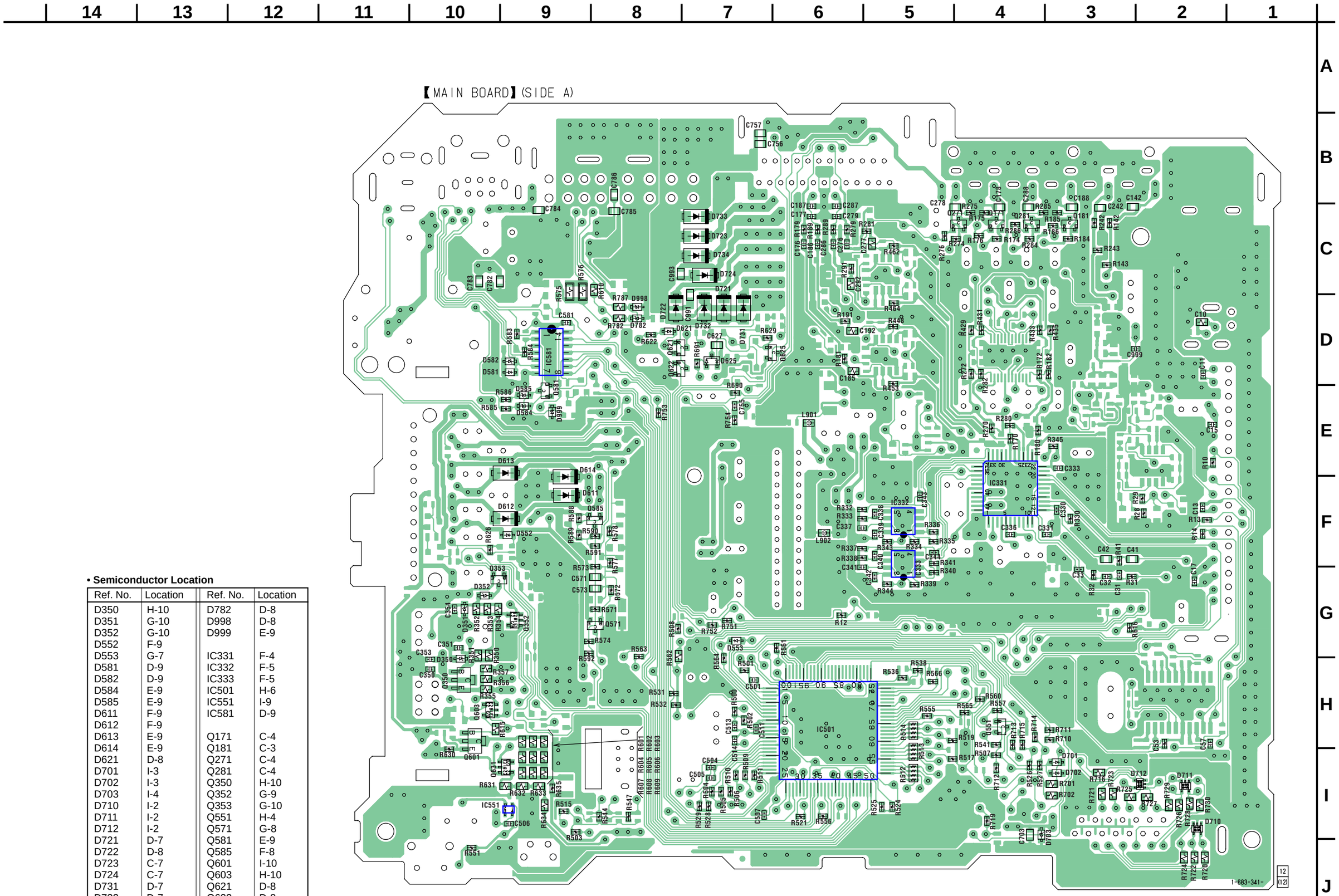

• **Semiconductor Location**

Ref. No.	Location	Ref. No.	Location
D350	H-10	D782	D-8
D351	G-10	D998	D-8
D352	G-10	D999	E-9
D552	F-9		
D553	G-7	IC331	F-4
D581	D-9	IC332	F-5
D582	D-9	IC333	F-5
D584	E-9	IC501	H-6
D585	E-9	IC551	I-9
D611	F-9	IC581	D-9
D612	F-9		
D613	E-9	Q171	C-4
D614	E-9	Q181	C-3
D621	D-8	Q271	C-4
D701	I-3	Q281	C-4
D702	I-3	Q350	H-10
D703	I-4	Q352	G-9
D710	I-2	Q353	G-10
D711	I-2	Q551	H-4
D712	I-2	Q571	G-8
D721	D-7	Q581	E-9
D722	D-8	Q585	F-8
D723	C-7	Q601	I-10
D724	C-7	Q603	H-10
D731	D-7	Q621	D-8
D732	D-7	Q622	D-8
D733	C-7	Q625	D-6
D734	C-7	Q631	I-9

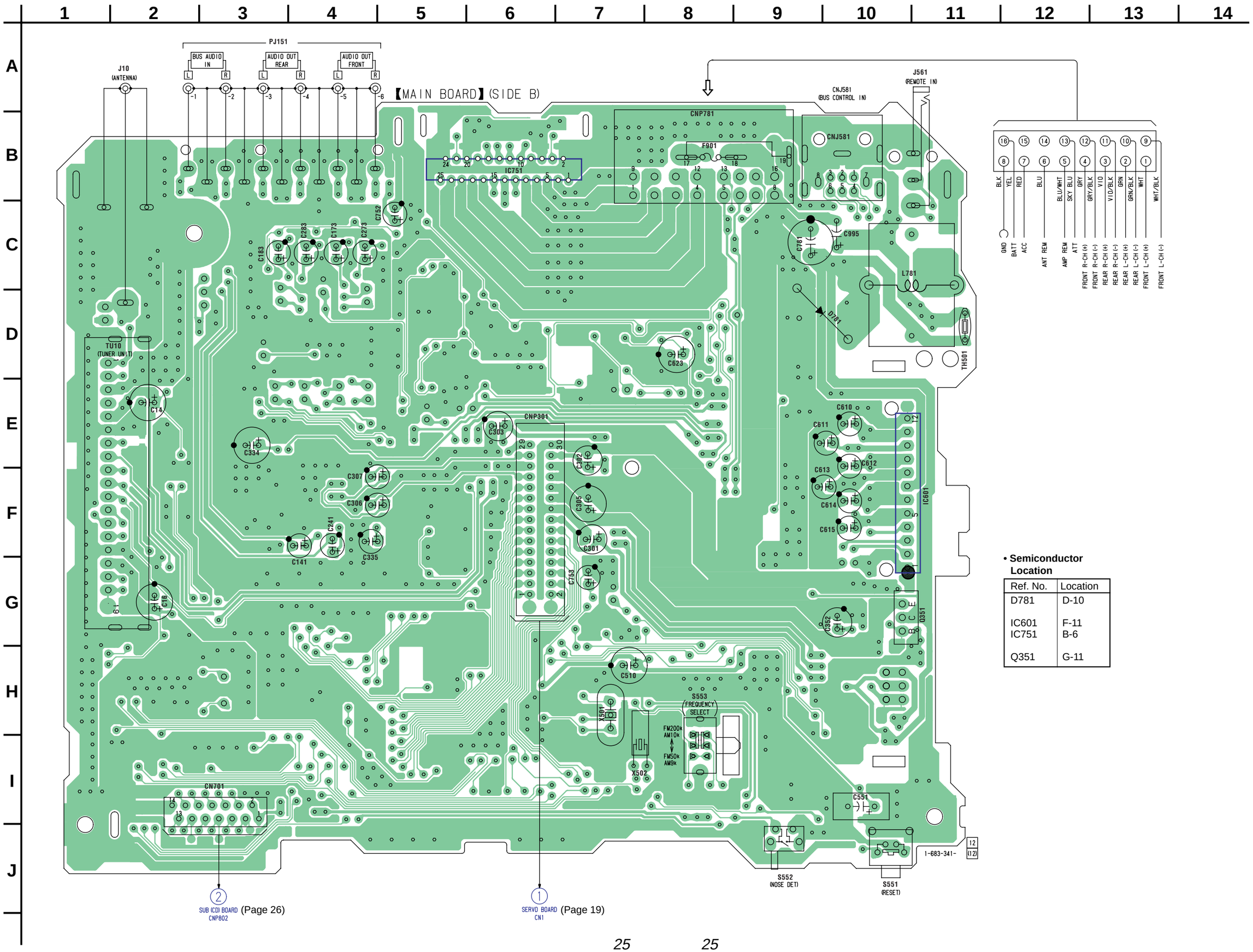

• **Semiconductor Location**

Ref. No.	Location
D781	D-10
IC601	F-11
IC751	B-6
Q351	G-11

3-12. PRINTED WIRING BOARD — RELAY SECTION — • Refer to page 17 for Circuit Boards Location.

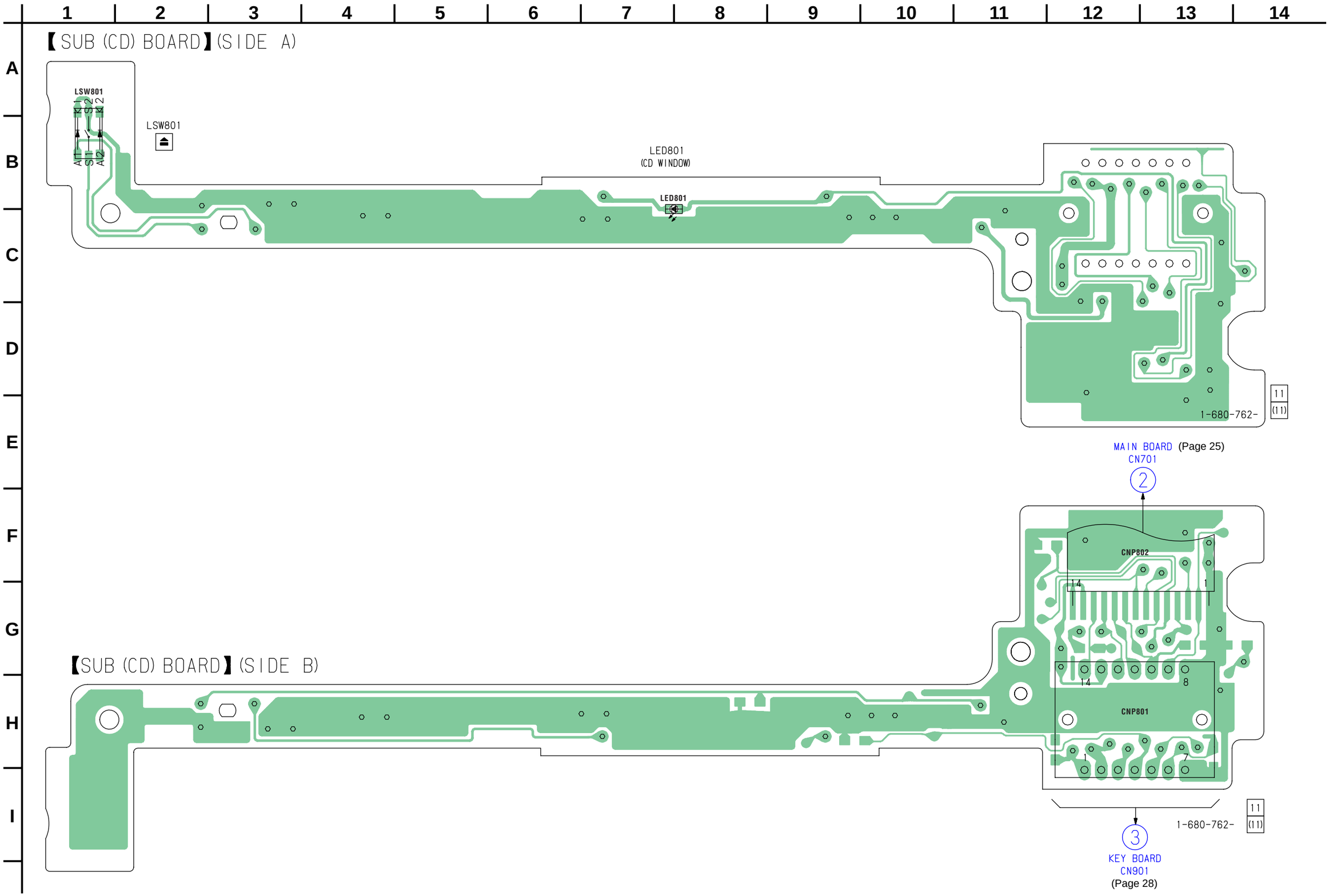

3-13. SCHEMATIC DIAGRAM — RELAY SECTION —

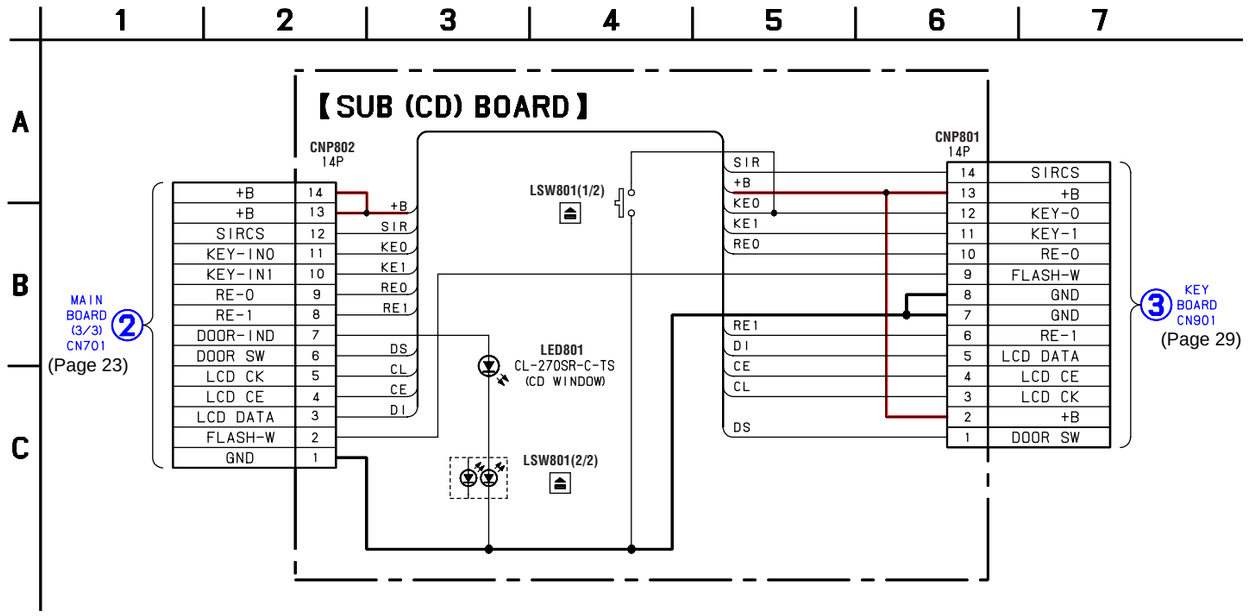

3-14. PRINTED WIRING BOARD — KEY SECTION — • Refer to page 17 for Circuit Boards Location.

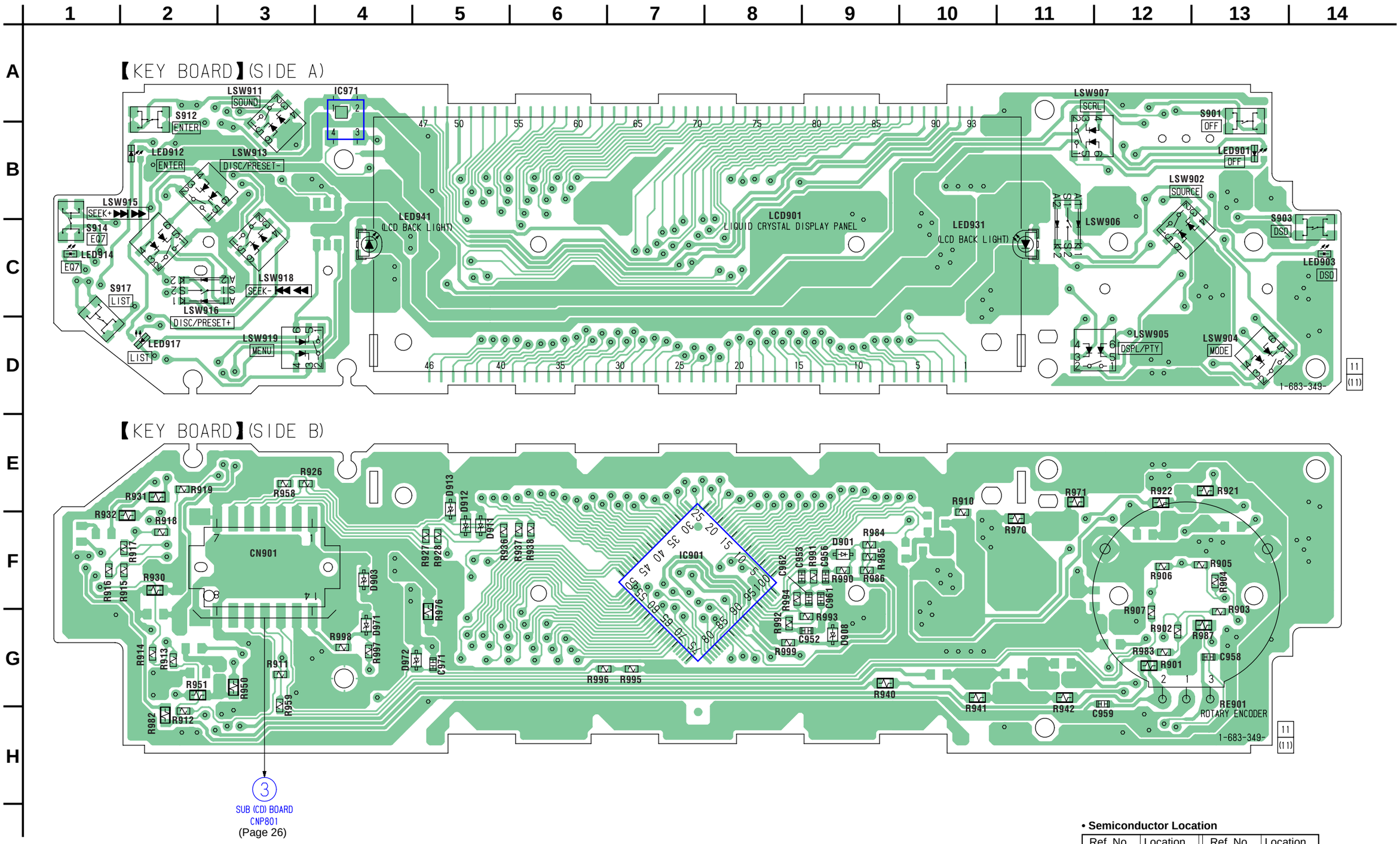

• **Semiconductor Location**

Ref. No.	Location	Ref. No.	Location
D901	F-9	IC971	A-4
D903	F-4		
D908	G-9	LED901	B-13
D911	F-5	LED903	C-14
D912	F-5	LED912	B-2
D913	E-5	LED914	C-1
D971	G-4	LED917	D-2
D972	G-5	LED931	C-11
		LED941	C-4
IC901	F-7		

3-15. SCHEMATIC DIAGRAM — KEY SECTION —

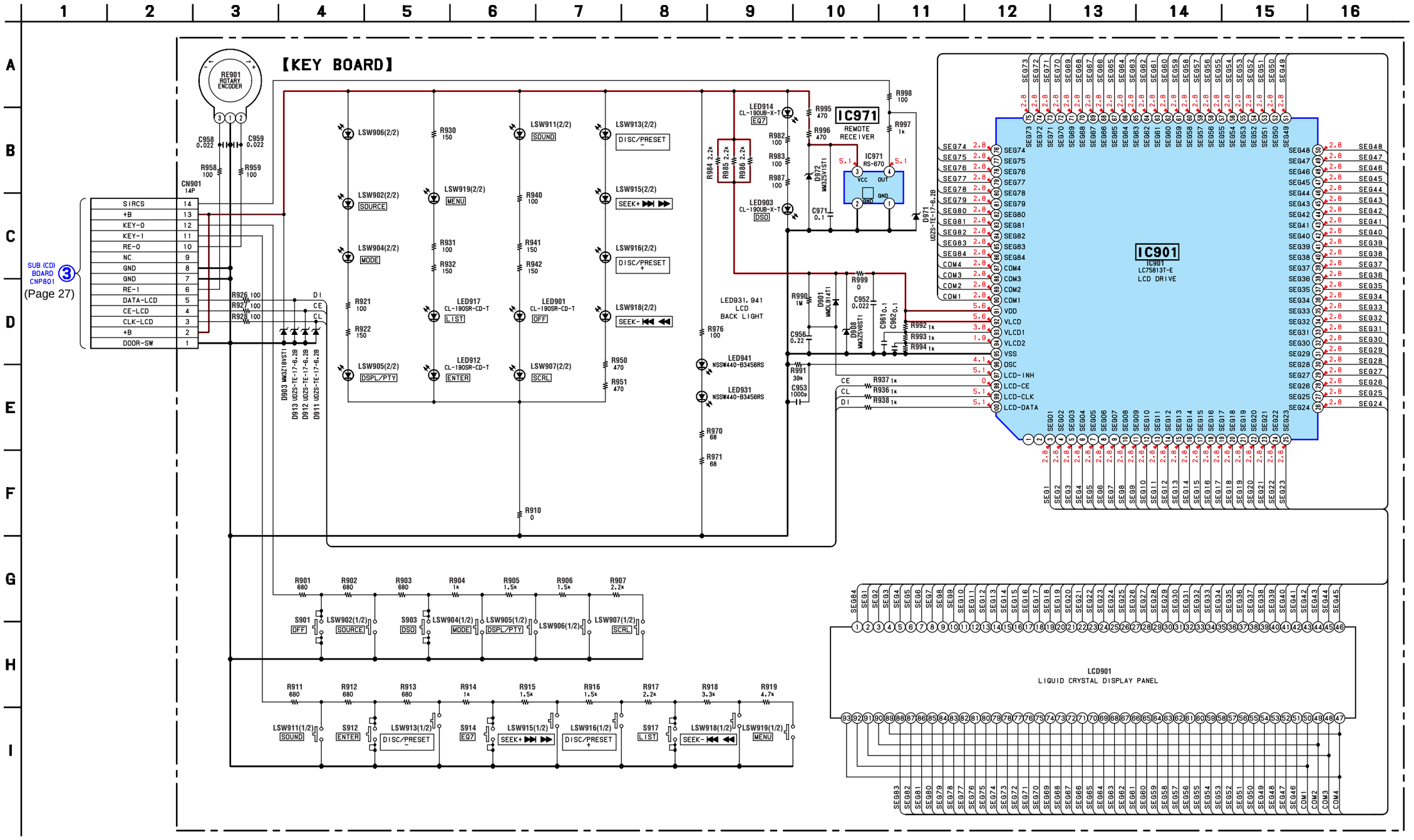

Note:
- Voltage is dc with respect to ground under no-signal (detuned) condition.
  no mark : FM

• IC BLOCK DIAGRAMS

IC1 μPD63711GC-8EU

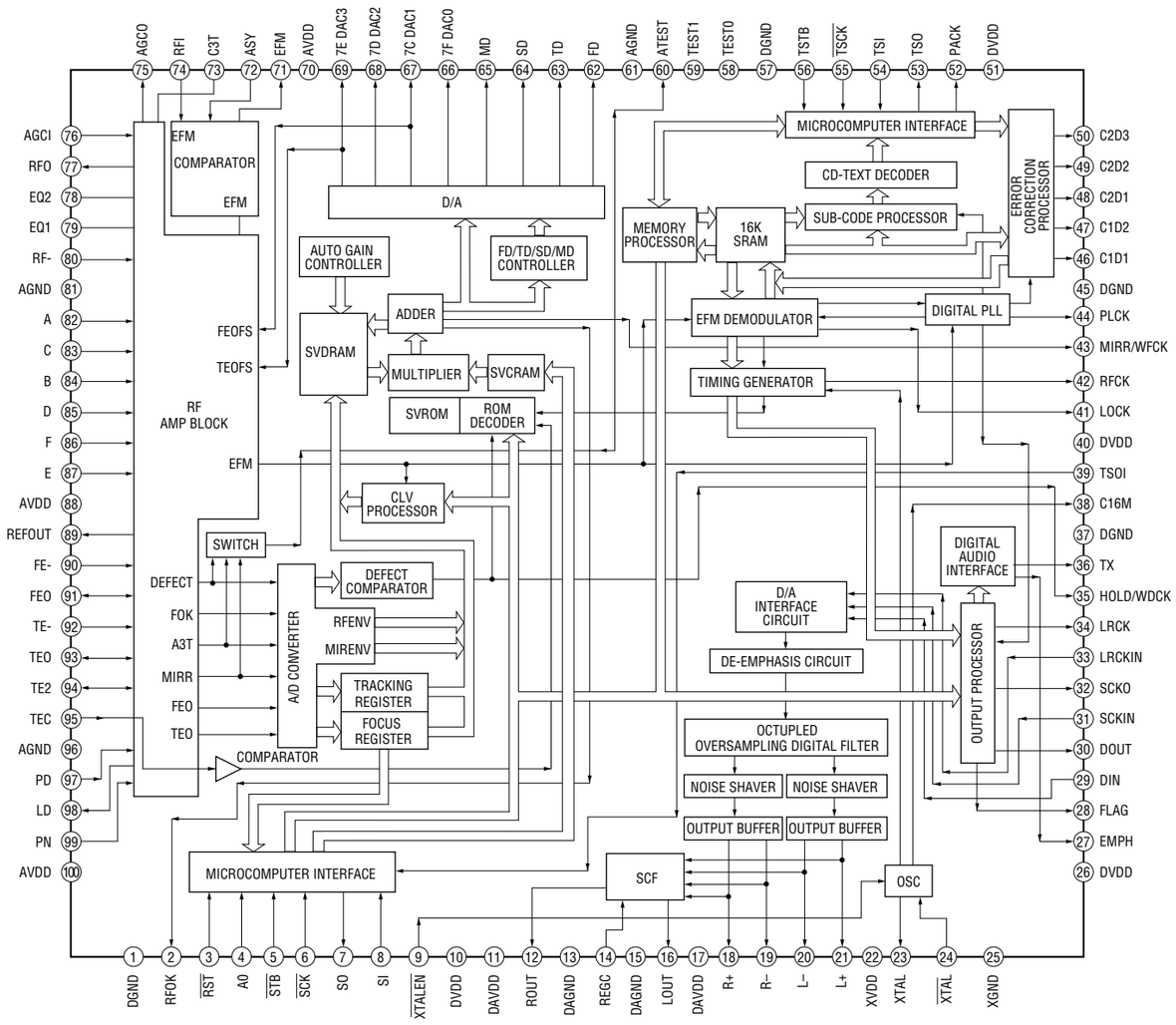

IC2 BA5810FP-E2

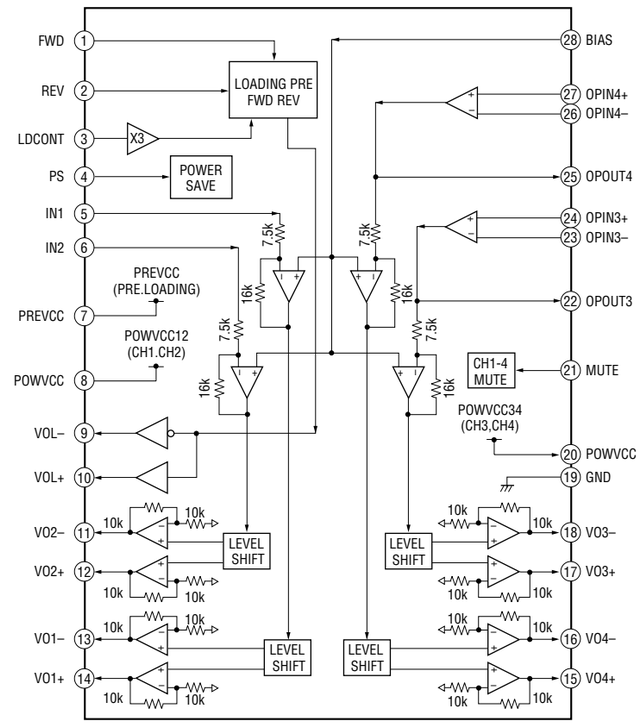

IC331 TDA7406

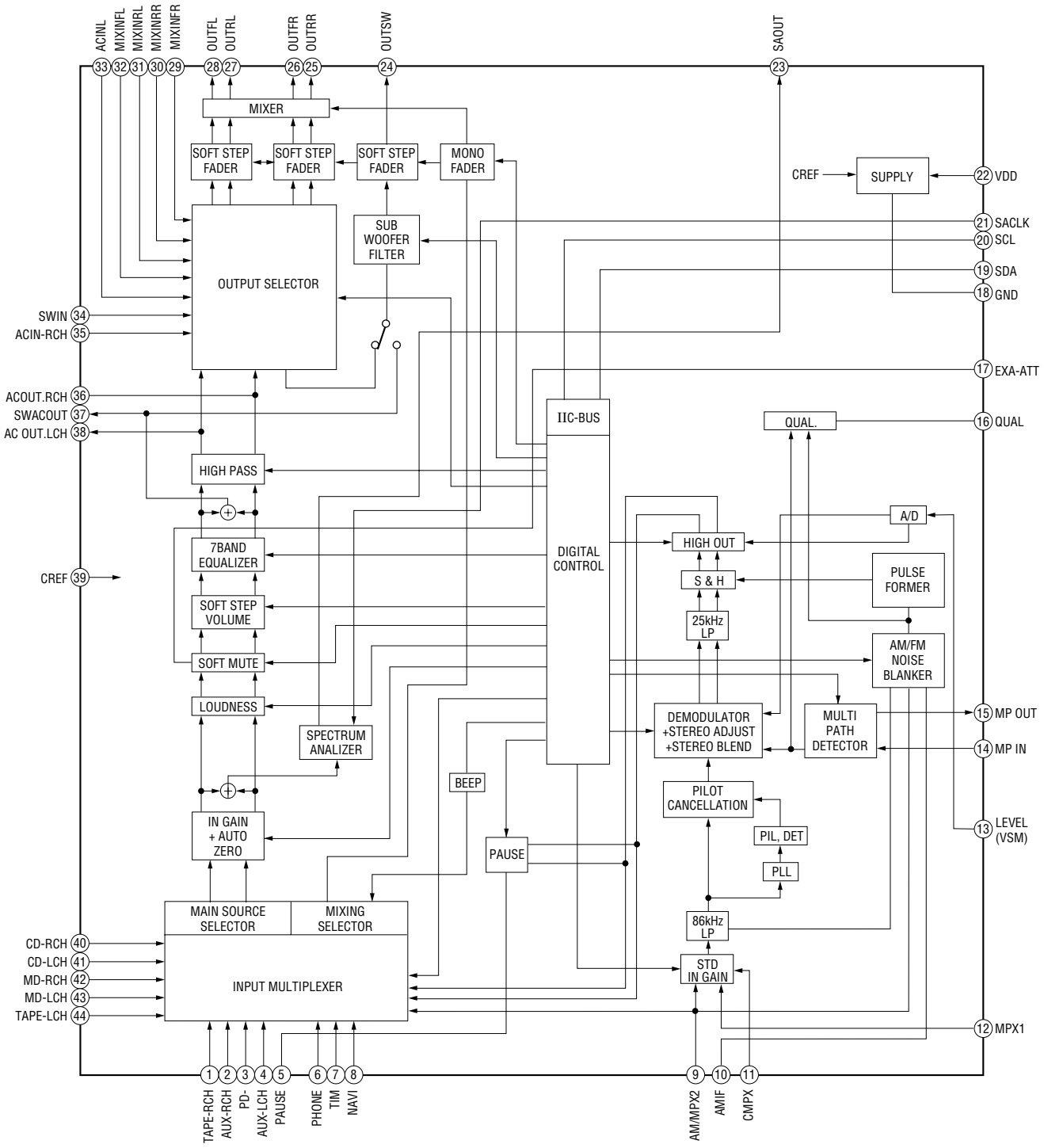

IC601 AN80T51

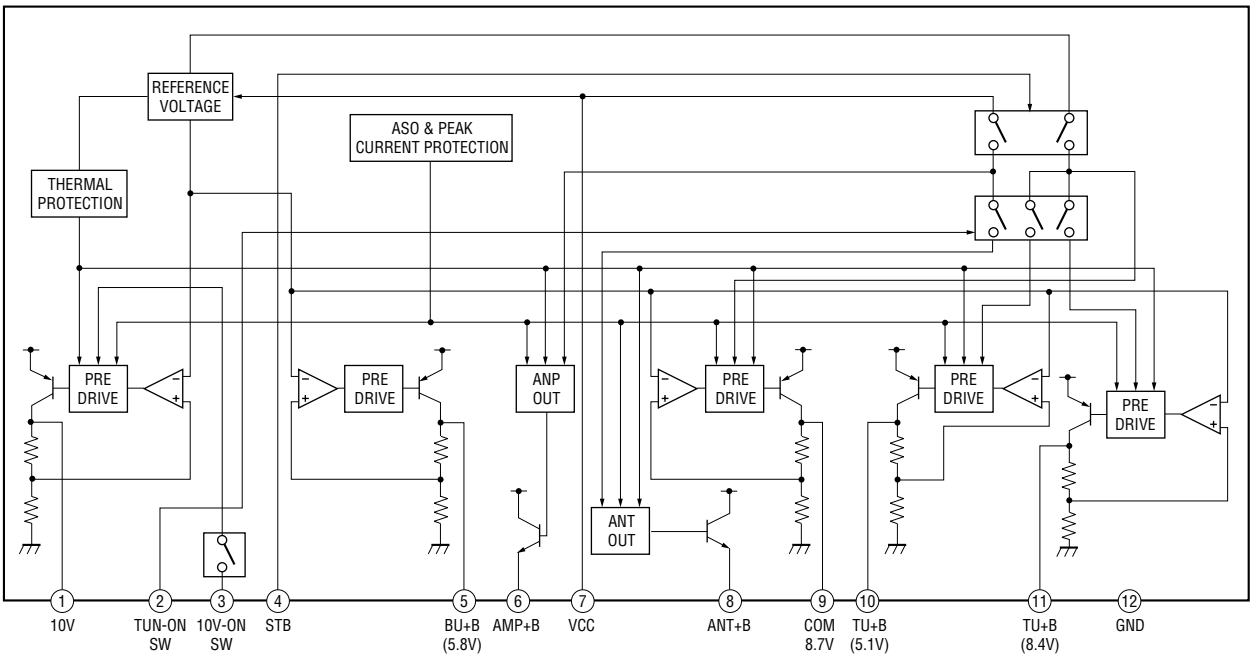

IC581 BA8270F-E2

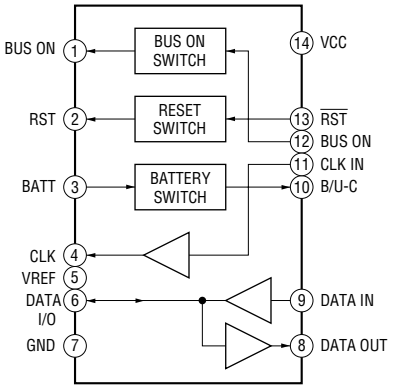

SECTION 4
EXPLODED VIEWS

NOTE:
- The mechanical parts with no reference number in the exploded views are not supplied.
- Items marked "*" are not stocked since they are seldom required for routine service. Some delay should be anticipated when ordering these items.
- -XX and -X mean standardized parts, so they may have some difference from the original one.
- Color Indication of Appearance Parts
  Example :
  KNOB, BALANCE (WHITE) ... (RED)
  ↑ Parts Color ↑ Cabinet's Color
- Accessories are given in the last of this parts list.

The components identified by mark ⚠ or dotted line with mark ⚠ are critical for safety.
Replace only with part number specified.

4-1. CHASSIS SECTION

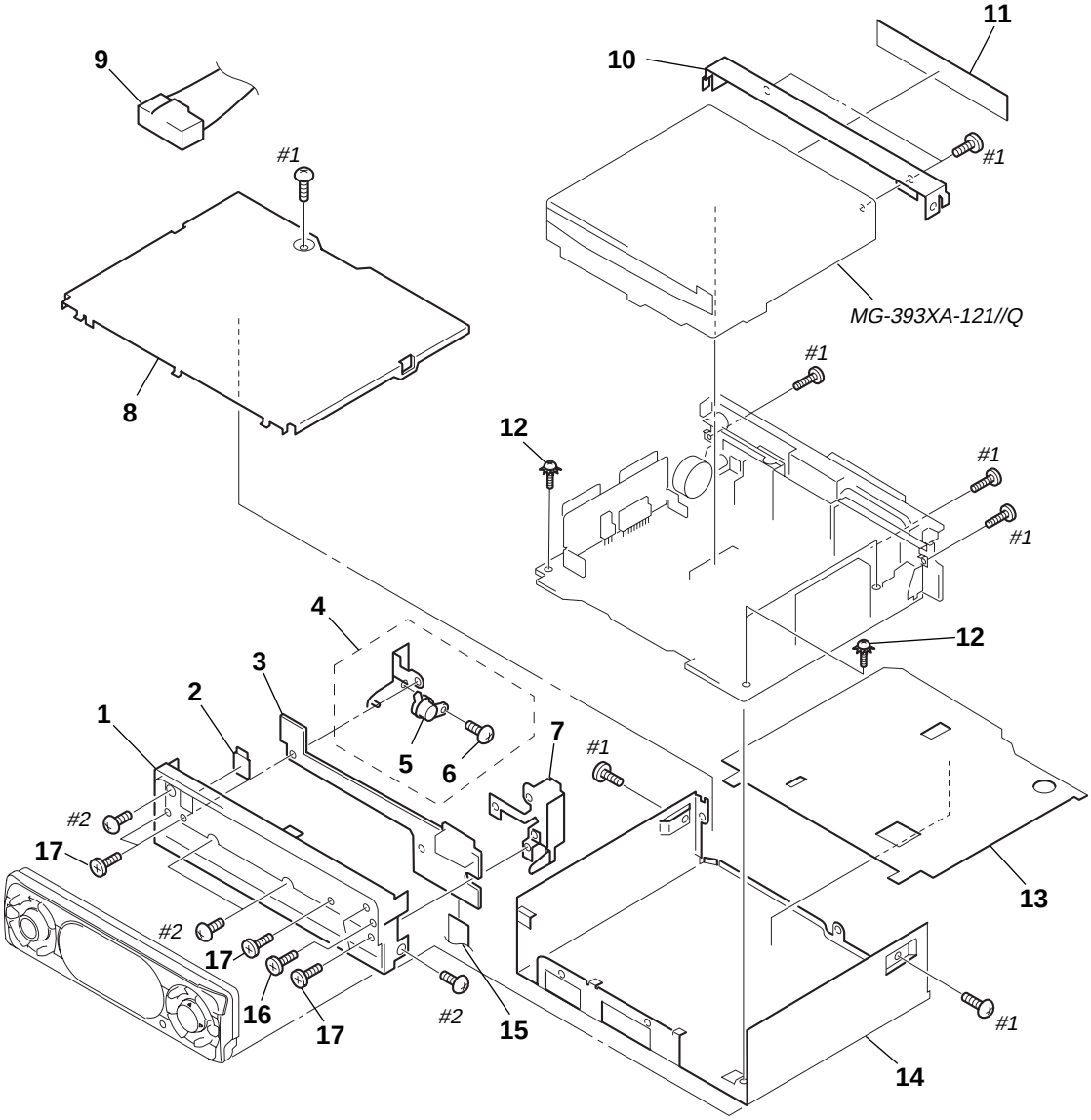

Ref. No.	Part No.	Description	Remark
1	X-3381-275-1	PANEL ASSY, SUB	
2	3-040-990-01	BUTTON (EJECT)	
* 3	1-680-762-11	SUB (CD) BOARD	
4	X-3376-699-6	GEAR ASSY	
5	3-030-909-03	DAMPER, OIL	
6	3-713-786-51	SCREW +P 2X3	
7	X-3377-621-8	LOCK ASSY	
8	3-223-782-21	COVER	
9	1-776-207-82	CORD (WITH CONNECTOR) (POWER)	
10	3-041-012-11	BRACKET (CD)	
* 11	3-227-287-01	SHEET, DUST PROTECTION	
12	3-376-464-11	SCREW (+PTT 2.6X6), GROUND POINT	
* 13	3-224-755-01	SHEET, INSULATING	
14	3-223-781-21	CHASSIS	
15	1-792-195-11	CABLE, FLEXIBLE FLAT (14 CORE) (CNP802)	
16	3-047-812-01	SCREW (LOCK)	
17	3-042-244-01	SCREW (T)	
#1	7-685-790-01	SCREW +PTT 2.6X4 (S)	
#2	7-685-792-09	SCREW +PTT 2.6X6 (S)	

4-2. MAIN BOARD SECTION

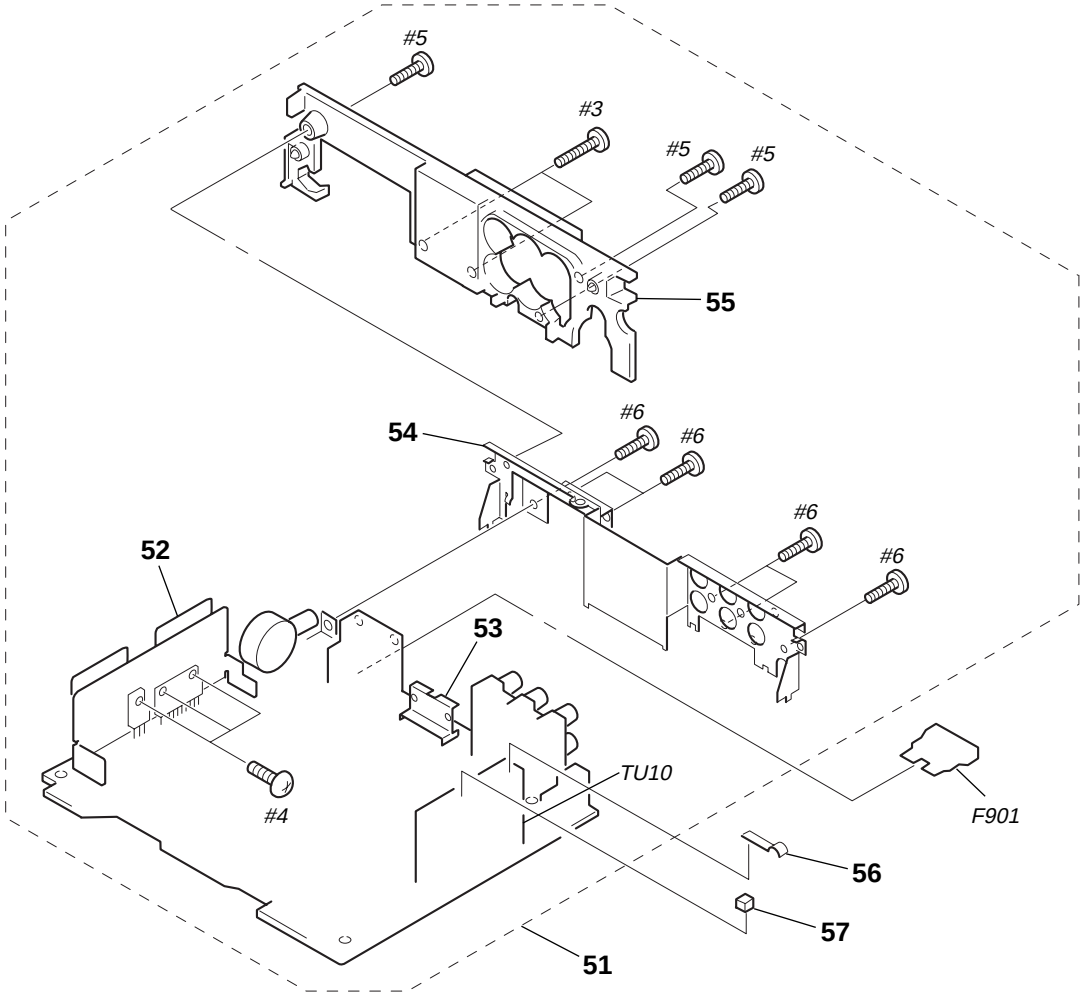

Ref. No.	Part No.	Description	Remark
51	A-3340-295-A	MAIN BOARD, COMPLETE	
52	3-236-285-01	HEAT SINK (REG)	
* 53	3-040-998-01	BRACKET (IC)	
* 54	3-223-783-01	CHASSIS (BACK)	
* 55	3-223-780-11	HEAT SINK	
* 56	3-045-878-01	PLATE (TU), GROUND	
* 57	3-045-877-02	CUSHION (TU)	

Ref. No.	Part No.	Description	Remark
F901	1-532-877-11	FUSE (BLADE TYPE) (AUTO FUSE) 10A	
TU10	A-3220-812-A	TUNER UNIT (TUX-020)	
#3	7-685-797-09	SCREW +PTT 2.6X16 (S)	
#4	7-685-646-79	SCREW +BVTP 3X8 TYPE2 N-S	
#5	7-685-794-09	SCREW +PTT 2.6X10 (S)	
#6	7-685-793-09	SCREW +PTT 2.6X8 (S)	

4-3. FRONT PANEL SECTION

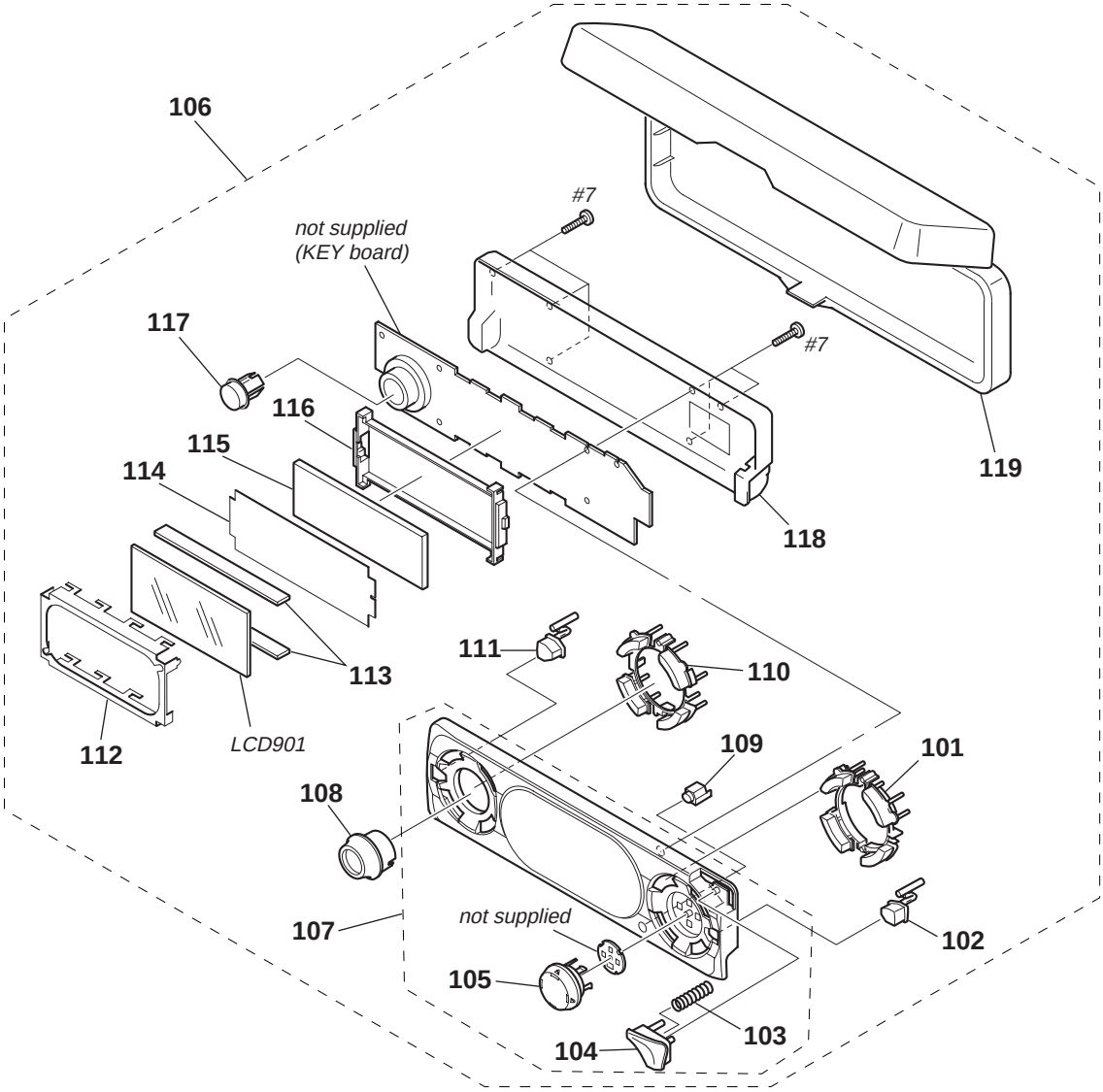

Ref. No.	Part No.	Description	Remark
101	3-236-267-11	BUTTON (R)	
102	3-236-269-01	BUTTON (EQ7)	
103	3-037-267-01	SPRING (OPEN)	
104	3-236-273-01	BUTTON (OPEN)	
105	3-236-271-01	BUTTON (4-DIR)	
106	A-3290-850-A	PANEL COMPLETE ASSY, FRONT	
107	X-3381-918-3	PANEL ASSY, FRONT	
108	3-236-272-01	KNOB (VOL)	
109	3-236-280-01	WINDOW, RAY CATCHER	
110	3-236-266-11	BUTTON (L)	
111	3-236-268-01	BUTTON (WL)	

Ref. No.	Part No.	Description	Remark
112	3-236-284-01	PLATE (LCD), GROUND	
113	1-694-882-11	CONDUCTIVE BOARD, CONNECTION	
114	3-236-438-01	ILLUMINATOR (LCD)	
115	3-236-278-01	PLATE (LCD), LIGHT GUIDE	
116	3-236-279-01	HOLDER	
117	3-236-270-01	BUTTON (SOURCE)	
118	X-3381-274-2	PANEL ASSY, FRONT BACK	
119	X-3378-490-2	CASE (PANEL) ASSY (for FRONT PANEL)	
LCD901	1-804-619-11	DISPLAY PANEL, LIQUID CRYSTAL	
#7	7-685-106-19	SCREW +P 2X10 TYPE2 NON-SLIT	

4-4. CD MECHANISM SECTION (1) (MG-393XA-121//Q)

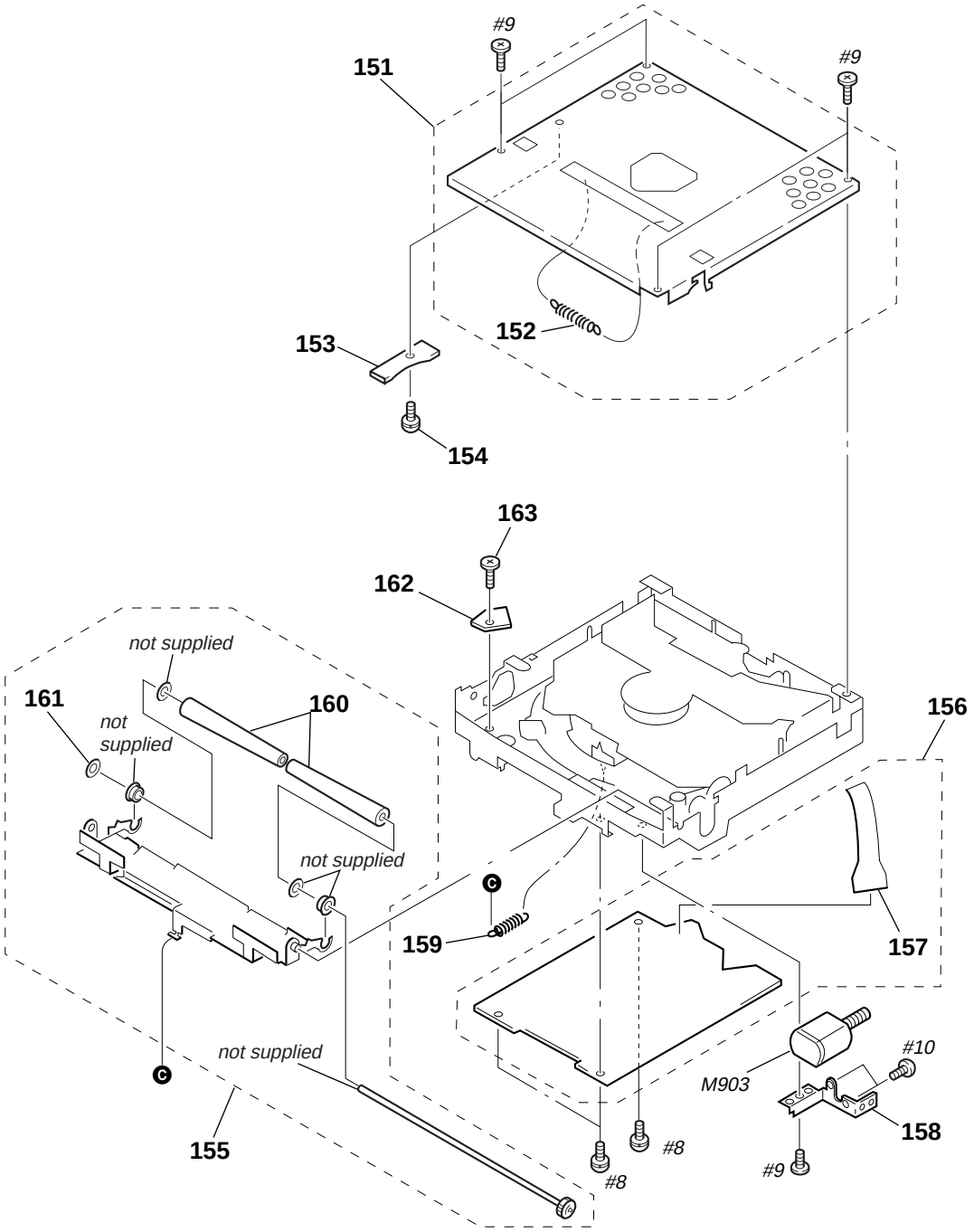

Ref. No.	Part No.	Description	Remark
151	A-3315-247-B	CHASSIS (T.U) ASSY	
152	3-931-909-01	SPRING (LR), TENSION	
153	1-659-836-11	DISC IN BOARD	
154	3-338-737-01	SCREW (2X3), +PS	
155	A-3315-040-A	ROLLER ASSY, ARM	
156	A-3283-270-A	SERVO BOARD, COMPLETE	
157	1-683-666-11	PICK-UP FLEXIBLE BOARD	
* 158	3-039-629-02	BRACKET (MOTOR)	
159	3-225-784-01	SPRING (RA3), TENSION	

Ref. No.	Part No.	Description	Remark
160	3-933-152-03	ROLLER (S)	
161	3-931-913-11	RING (ROLLER), RETAINING	
162	1-659-837-11	LOAD BOARD	
163	3-338-737-01	SCREW (2X3), +PS	
M903	A-3315-039-A	MOTOR SUB ASSY, LD (LOADING)	
#8	7-628-253-00	SCREW +PS 2X4	
#9	7-627-553-37	SCREW, PRECISION +P 2X3 TYPE3	
#10	7-627-553-17	SCREW, PRECISION +P 2X2 TYPE3	

4-5. CD MECHANISM SECTION (2) (MG-393XA-121//Q)

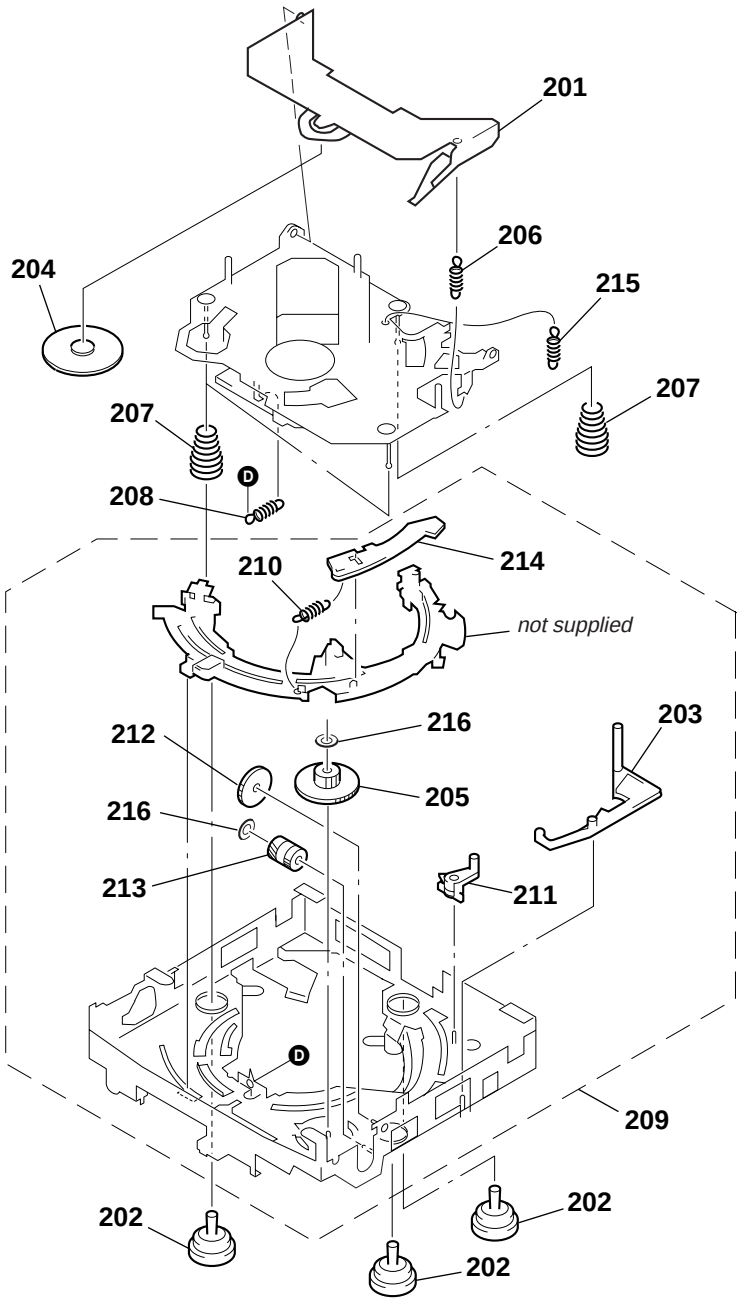

Ref. No.	Part No.	Description	Remark	Ref. No.	Part No.	Description	Remark
201	X-3378-956-8	ARM ASSY, CHUCKING		209	A-3315-243-D	CHASSIS (M) ASSY	
202	3-931-897-61	DAMPER (T)		210	3-220-180-01	SPRING (TR2), TENSION	
203	3-039-627-01	LEVER (D)		211	3-931-881-03	LEVER (LOCK)	
204	3-040-165-02	RETAINER (DISC)		212	3-931-882-02	GEAR (MDL)	
205	3-014-727-01	WHEEL (LW), WORM		213	3-007-537-11	WHEEL (U), WORM	
206	3-931-895-01	SPRING (CH), TENSION		214	3-039-626-01	LEVER (TR)	
207	3-931-898-01	SPRING (FL), COMPRESSION		215	3-032-484-01	SPRING (KR1), TENSION	
208	3-032-483-02	SPRING (KF1), TENSION		216	3-018-272-01	WASHER	

4-6. CD MECHANISM SECTION (3) (MG-393XA-121//Q)

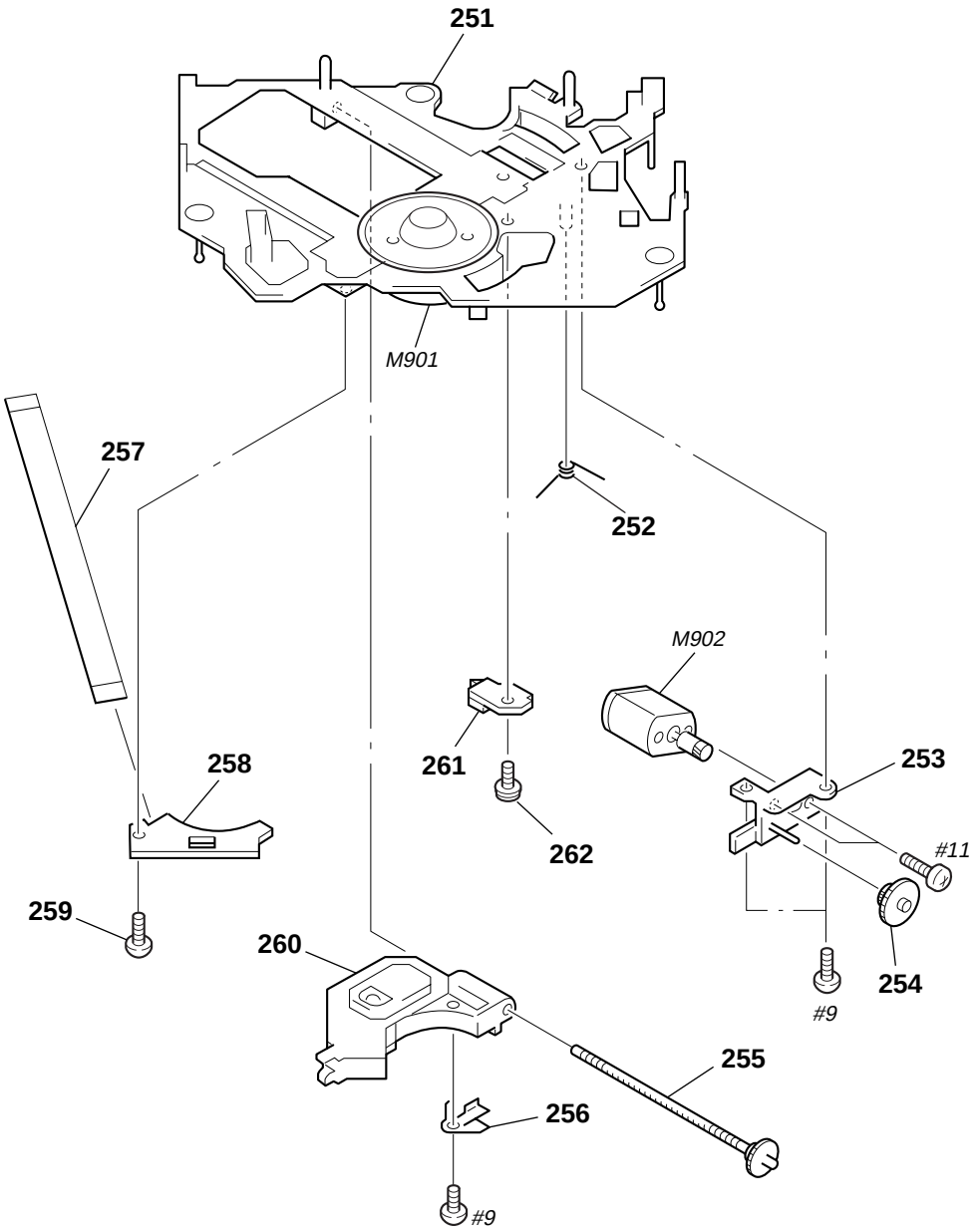

The components identified by mark ⚠ or dotted line with mark ⚠ are critical for safety.
Replace only with part number specified.

Ref. No.	Part No.	Description	Remark
251	X-3381-611-1	CHASSIS (OP) ASSY (including M901)	
252	3-043-494-01	SPRING (SL), TORSION	
253	3-040-170-01	BASE (DRIVING)	
254	3-040-419-01	GEAR (MIDWAY)	
255	A-3291-669-A	SHAFT (FEED) ASSY	
256	3-025-743-01	SPRING (FEED), LEAF	
257	1-659-880-11	MOTOR FLEXIBLE BOARD	
258	1-659-834-11	SUB BOARD	
259	3-909-607-01	SCREW	
⚠260	8-820-103-11	PICK-UP, OPTICAL KSS-720A/C-RP	
261	1-659-835-12	LIMIT BOARD	
262	3-338-737-01	SCREW (2X3), +PS	
M902	A-3291-674-A	MOTOR ASSY, SLED (SLED)	
#9	7-627-553-37	SCREW, PRECISION +P 2X3 TYPE3	
#11	7-627-850-28	SCREW, PRECISION +P 1.4X3	

SECTION 5
ELECTRICAL PARTS LIST

DISC IN | KEY

NOTE:
- Due to standardization, replacements in the parts list may be different from the parts specified in the diagrams or the components used on the set.
- -XX and -X mean standardized parts, so they may have some difference from the original one.
- RESISTORS
  All resistors are in ohms.
  METAL:Metal-film resistor.
  METAL OXIDE: Metal oxide-film resistor.
  F:nonflammable
- Items marked "*" are not stocked since they are seldom required for routine service. Some delay should be anticipated when ordering these items.
- SEMICONDUCTORS
  In each case, u : µ, for example:
  uA.. : µA.. uPA.. : µPA..
  uPB.. : µPB.. uPC.. : µPC.. uPD.. : µPD..
- CAPACITORS
  uF : µF
- COILS
  uH : µH

The components identified by mark ⚠ or dotted line with mark ⚠ are critical for safety.
Replace only with part number specified.

When indicating parts by reference number, please include the board.

Ref. No.	Part No.	Description				Remark
	1-659-836-11	DISC IN BOARD				
		**********				
		< SWITCH >				
SW1	1-529-566-31	SWITCH, PUSH (1 KEY) (DISC IN)				
SW2	1-529-566-31	SWITCH, PUSH (1 KEY) (SELF)				
**********						
		KEY BOARD				
		**********				
	1-694-882-11	CONDUCTIVE BOARD, CONNECTION				
*	3-014-602-01	SPACER (A)				
	3-236-278-01	PLATE (LCD), LIGHT GUIDE				
	3-236-279-01	HOLDER				
	3-236-284-01	PLATE (LCD), GROUND				
	3-236-438-01	ILLUMINATOR (LCD)				
		< CAPACITOR >				
C952	1-164-227-11	CERAMIC CHIP	0.022uF	10%	25V	
C953	1-162-964-11	CERAMIC CHIP	0.001uF	10%	50V	
C956	1-115-467-11	CERAMIC CHIP	0.22uF	10%	10V	
C958	1-164-227-11	CERAMIC CHIP	0.022uF	10%	25V	
C959	1-164-227-11	CERAMIC CHIP	0.022uF	10%	25V	
C961	1-107-826-11	CERAMIC CHIP	0.1uF	10%	16V	
C962	1-107-826-11	CERAMIC CHIP	0.1uF	10%	16V	
C971	1-107-826-11	CERAMIC CHIP	0.1uF	10%	16V	
		< CONNECTOR >				
CN901	1-794-065-22	PLUG, CONNECTOR 14P				
		< DIODE >				
D901	8-719-081-97	DIODE MMDL914T1				
D903	8-719-056-93	DIODE UDZ-TE-17-18B				
D908	8-719-036-94	DIODE RD5.6SB-T1				
D911	8-719-069-56	DIODE UDZS-TE17-6.2B				
D912	8-719-069-56	DIODE UDZS-TE17-6.2B				
D913	8-719-069-56	DIODE UDZS-TE17-6.2B				
D971	8-719-069-56	DIODE UDZS-TE17-6.2B				
D972	8-719-976-99	DIODE DTZ5.1B				
		< IC >				
IC901	6-701-640-01	IC LC75813T-E				
IC971	6-600-047-01	IC RS-670				

Ref. No.	Part No.	Description				Remark
		< LIQUID CRYSTAL DISPLAY >				
LCD901	1-804-619-11	DISPLAY PANEL, LIQUID CRYSTAL				
		< DIODE >				
LED901	8-719-061-16	LED CL-190SR-CD-T (OFF)				
LED903	8-719-080-04	LED CL-190UB-X-T (DSO)				
LED912	8-719-061-16	LED CL-190SR-CD-T (ENTER)				
LED914	8-719-080-04	LED CL-190UB-X-T (EQ7)				
LED917	8-719-061-16	LED CL-190SR-CD-T (LIST)				
LED931	6-500-257-01	LED NSSW440-B3456RS (LCD BACK LIGHT)				
LED941	6-500-257-01	LED NSSW440-B3456RS (LCD BACK LIGHT)				
		< SWITCH >				
LSW902	1-771-476-11	SWITCH, KEYBOARD (WITH LED) (SOURCE)				
LSW904	1-771-476-11	SWITCH, KEYBOARD (WITH LED) (MODE)				
LSW905	1-771-476-11	SWITCH, KEYBOARD (WITH LED) (DSPL/PTY)				
LSW906	1-771-883-11	SWITCH, TACTILE (WITH LED)				
LSW907	1-771-476-11	SWITCH, KEYBOARD (WITH LED) (SCRL)				
LSW911	1-771-476-11	SWITCH, KEYBOARD (WITH LED) (SOUND)				
LSW913	1-771-476-11	SWITCH, KEYBOARD (WITH LED) (DISC/PRESET –)				
LSW915	1-771-476-11	SWITCH, KEYBOARD (WITH LED) (SEEK + ▶▶I ▶▶)				
LSW916	1-771-883-11	SWITCH, TACTILE (WITH LED) (DISC/PRESET +)				
LSW918	1-771-476-11	SWITCH, KEYBOARD (WITH LED) (SEEK – I◀◀ ◀◀)				
LSW919	1-771-476-11	SWITCH, KEYBOARD (WITH LED) (MENU)				
		< RESISTOR >				
R901	1-216-819-11	METAL CHIP	680	5%	1/10W	
R902	1-216-819-11	METAL CHIP	680	5%	1/10W	
R903	1-216-819-11	METAL CHIP	680	5%	1/10W	
R904	1-216-821-11	METAL CHIP	1K	5%	1/10W	
R905	1-216-823-11	METAL CHIP	1.5K	5%	1/10W	
R906	1-216-823-11	METAL CHIP	1.5K	5%	1/10W	
R907	1-216-825-11	METAL CHIP	2.2K	5%	1/10W	
R910	1-216-864-11	METAL CHIP	0	5%	1/10W	
R911	1-216-819-11	METAL CHIP	680	5%	1/10W	
R912	1-216-819-11	METAL CHIP	680	5%	1/10W	
R913	1-216-819-11	METAL CHIP	680	5%	1/10W	
R914	1-216-821-11	METAL CHIP	1K	5%	1/10W	
R915	1-216-823-11	METAL CHIP	1.5K	5%	1/10W	
R916	1-216-823-11	METAL CHIP	1.5K	5%	1/10W	

KEY | LIMIT | LOAD | MAIN

Ref. No.	Part No.	Description			Remark
R917	1-216-825-11	METAL CHIP	2.2K	5%	1/10W
R918	1-216-827-11	METAL CHIP	3.3K	5%	1/10W
R919	1-216-829-11	METAL CHIP	4.7K	5%	1/10W
R921	1-216-025-11	RES-CHIP	100	5%	1/10W
R922	1-216-029-00	METAL CHIP	150	5%	1/10W
R926	1-216-809-11	METAL CHIP	100	5%	1/10W
R927	1-216-809-11	METAL CHIP	100	5%	1/10W
R928	1-216-809-11	METAL CHIP	100	5%	1/10W
R930	1-216-029-00	METAL CHIP	150	5%	1/10W
R931	1-216-025-11	RES-CHIP	100	5%	1/10W
R932	1-216-029-00	METAL CHIP	150	5%	1/10W
R936	1-216-821-11	METAL CHIP	1K	5%	1/10W
R937	1-216-821-11	METAL CHIP	1K	5%	1/10W
R938	1-216-821-11	METAL CHIP	1K	5%	1/10W
R940	1-216-025-11	RES-CHIP	100	5%	1/10W
R941	1-216-029-00	METAL CHIP	150	5%	1/10W
R942	1-216-029-00	METAL CHIP	150	5%	1/10W
R950	1-216-041-00	METAL CHIP	470	5%	1/10W
R951	1-216-041-00	METAL CHIP	470	5%	1/10W
R958	1-216-809-11	METAL CHIP	100	5%	1/10W
R959	1-216-809-11	METAL CHIP	100	5%	1/10W
R970	1-216-021-00	METAL CHIP	68	5%	1/10W
R971	1-216-021-00	METAL CHIP	68	5%	1/10W
R976	1-216-025-11	RES-CHIP	100	5%	1/10W
R982	1-216-025-11	RES-CHIP	100	5%	1/10W
R983	1-216-025-11	RES-CHIP	100	5%	1/10W
R984	1-216-825-11	METAL CHIP	2.2K	5%	1/10W
R985	1-216-825-11	METAL CHIP	2.2K	5%	1/10W
R986	1-216-825-11	METAL CHIP	2.2K	5%	1/10W
R987	1-216-025-11	RES-CHIP	100	5%	1/10W
R990	1-216-857-11	METAL CHIP	1M	5%	1/10W
R991	1-216-840-11	METAL CHIP	39K	5%	1/10W
R992	1-216-821-11	METAL CHIP	1K	5%	1/10W
R993	1-216-821-11	METAL CHIP	1K	5%	1/10W
R994	1-216-821-11	METAL CHIP	1K	5%	1/10W
R995	1-216-817-11	METAL CHIP	470	5%	1/10W
R996	1-216-817-11	METAL CHIP	470	5%	1/10W
R997	1-216-821-11	METAL CHIP	1K	5%	1/10W
R998	1-216-809-11	METAL CHIP	100	5%	1/10W
R999	1-216-864-11	METAL CHIP	0	5%	1/10W
		< ROTARY ENCODER >			
RE901	1-477-144-12	ENCODER, ROTARY			
		< SWITCH >			
S901	1-771-884-11	SWITCH, TACTILE (WITH LED) (OFF)			
S903	1-771-884-11	SWITCH, TACTILE (WITH LED) (DSO)			
S912	1-771-884-11	SWITCH, TACTILE (WITH LED) (ENTER)			
S914	1-771-884-11	SWITCH, TACTILE (WITH LED) (EQ7)			
S917	1-771-884-11	SWITCH, TACTILE (WITH LED) (LIST)			

****

Ref. No.	Part No.	Description			Remark
	1-659-835-12	LIMIT BOARD			
		**********			
		< SWITCH >			
SW3	1-529-565-41	SWITCH, PUSH (1 KEY) (LIMIT)			

****

	1-659-837-11	LOAD BOARD			
		**********			
		< SWITCH >			
SW4	1-529-566-31	SWITCH, PUSH (1 KEY) (DOWN)			

****

	A-3340-295-A	MAIN BOARD, COMPLETE			
		**********			
*	3-040-998-01	BRACKET (IC)			
*	3-223-780-11	HEAT SINK			
*	3-223-783-01	CHASSIS (BACK)			
	3-236-285-01	HEAT SINK (REG)			
	7-685-646-79	SCREW +BVTP 3X8 TYPE2 N-S			
	7-685-793-09	SCREW +PTT 2.6X8 (S)			
	7-685-794-09	SCREW +PTT 2.6X10 (S)			
	7-685-797-09	SCREW +PTT 2.6X16 (S)			
		< CAPACITOR >			
C10	1-216-864-11	METAL CHIP	0	5%	1/10W
C11	1-162-918-11	CERAMIC CHIP	18PF	5%	50V
C13	1-164-156-11	CERAMIC CHIP	0.1uF		25V
C14	1-124-584-00	ELECT	100uF	20%	10V
C15	1-164-156-11	CERAMIC CHIP	0.1uF		25V
C16	1-124-584-00	ELECT	100uF	20%	10V
C17	1-164-156-11	CERAMIC CHIP	0.1uF		25V
C31	1-162-968-11	CERAMIC CHIP	0.0047uF	10%	50V
C32	1-165-176-11	CERAMIC CHIP	0.047uF	10%	16V
C33	1-164-227-11	CERAMIC CHIP	0.022uF	10%	25V
C41	1-109-982-11	CERAMIC CHIP	1uF	10%	10V
C42	1-109-982-11	CERAMIC CHIP	1uF	10%	10V
C53	1-216-864-11	METAL CHIP	0	5%	1/10W
C57	1-216-864-11	METAL CHIP	0	5%	1/10W
C141	1-126-160-11	ELECT	1uF	20%	50V
C142	1-163-251-11	CERAMIC CHIP	100PF	5%	50V
C173	1-124-233-11	ELECT	10uF	20%	16V
C176	1-125-891-11	CERAMIC CHIP	0.47uF	10%	10V
C177	1-162-964-11	CERAMIC CHIP	0.001uF	10%	50V
C178	1-163-251-11	CERAMIC CHIP	100PF	5%	50V
C183	1-124-233-11	ELECT	10uF	20%	16V
C185	1-216-864-11	METAL CHIP	0	5%	1/10W
C186	1-125-891-11	CERAMIC CHIP	0.47uF	10%	10V
C187	1-162-964-11	CERAMIC CHIP	0.001uF	10%	50V
C188	1-163-251-11	CERAMIC CHIP	100PF	5%	50V
C192	1-216-864-11	METAL CHIP	0	5%	1/10W
C241	1-126-160-11	ELECT	1uF	20%	50V
C242	1-163-251-11	CERAMIC CHIP	100PF	5%	50V
C273	1-124-233-11	ELECT	10uF	20%	16V
C276	1-125-891-11	CERAMIC CHIP	0.47uF	10%	10V

Ref. No.	Part No.	Description			Remark
C277	1-216-864-11	METAL CHIP	0	5%	1/10W
C278	1-163-251-11	CERAMIC CHIP	100PF	5%	50V
C279	1-162-964-11	CERAMIC CHIP	0.001uF	10%	50V
C283	1-124-233-11	ELECT	10uF	20%	16V
C286	1-125-891-11	CERAMIC CHIP	0.47uF	10%	10V
C287	1-162-964-11	CERAMIC CHIP	0.001uF	10%	50V
C288	1-163-251-11	CERAMIC CHIP	100PF	5%	50V
C292	1-216-864-11	METAL CHIP	0	5%	1/10W
C301	1-124-234-00	ELECT	22uF	20%	16V
C302	1-124-234-00	ELECT	22uF	20%	16V
C303	1-124-234-00	ELECT	22uF	20%	16V
C305	1-124-584-00	ELECT	100uF	20%	10V
C306	1-126-160-11	ELECT	1uF	20%	50V
C307	1-126-160-11	ELECT	1uF	20%	50V
C330	1-162-968-11	CERAMIC CHIP	0.0047uF	10%	50V
C331	1-125-891-11	CERAMIC CHIP	0.47uF	10%	10V
C333	1-162-970-11	CERAMIC CHIP	0.01uF	10%	25V
C334	1-124-584-00	ELECT	100uF	20%	10V
C335	1-124-233-11	ELECT	10uF	20%	16V
C336	1-162-970-11	CERAMIC CHIP	0.01uF	10%	25V
C337	1-162-970-11	CERAMIC CHIP	0.01uF	10%	25V
C338	1-162-965-11	CERAMIC CHIP	0.0015uF	10%	50V
C339	1-164-156-11	CERAMIC CHIP	0.1uF		25V
C340	1-162-965-11	CERAMIC CHIP	0.0015uF	10%	50V
C341	1-162-970-11	CERAMIC CHIP	0.01uF	10%	25V
C342	1-164-156-11	CERAMIC CHIP	0.1uF		25V
C343	1-127-715-11	CERAMIC CHIP	0.22uF	10%	16V
C344	1-127-715-11	CERAMIC CHIP	0.22uF	10%	16V
C350	1-162-970-11	CERAMIC CHIP	0.01uF	10%	25V
C351	1-162-970-11	CERAMIC CHIP	0.01uF	10%	25V
C352	1-124-234-00	ELECT	22uF	20%	16V
C353	1-162-970-11	CERAMIC CHIP	0.01uF	10%	25V
C354	1-164-156-11	CERAMIC CHIP	0.1uF		25V
C501	1-162-968-11	CERAMIC CHIP	0.0047uF	10%	50V
C504	1-162-919-11	CERAMIC CHIP	22PF	5%	50V
C505	1-162-918-11	CERAMIC CHIP	18PF	5%	50V
C506	1-164-156-11	CERAMIC CHIP	0.1uF		25V
C507	1-162-927-11	CERAMIC CHIP	100PF	5%	50V
C510	1-124-584-00	ELECT	100uF	20%	10V
C511	1-162-970-11	CERAMIC CHIP	0.01uF	10%	25V
C513	1-162-918-11	CERAMIC CHIP	18PF	5%	50V
C514	1-162-915-11	CERAMIC CHIP	10PF	0.5PF	50V
C551	1-125-710-11	DOUBLE LAYERS	0.1F		5.5V
C571	1-164-505-11	CERAMIC CHIP	2.2uF		16V
C573	1-164-505-11	CERAMIC CHIP	2.2uF		16V
C581	1-162-970-11	CERAMIC CHIP	0.01uF	10%	25V
C610	1-126-157-11	ELECT	10uF	20%	16V
C611	1-126-157-11	ELECT	10uF	20%	16V
C612	1-126-157-11	ELECT	10uF	20%	16V
C613	1-126-157-11	ELECT	10uF	20%	16V
C614	1-126-157-11	ELECT	10uF	20%	16V
C615	1-126-157-11	ELECT	10uF	20%	16V
C623	1-124-589-11	ELECT	47uF	20%	16V
C627	1-164-346-11	CERAMIC CHIP	1uF		16V
C703	1-163-009-11	CERAMIC CHIP	0.001uF	10%	50V

Ref. No.	Part No.	Description			Remark
C752	1-124-233-11	ELECT	10uF	20%	16V
C753	1-124-233-11	ELECT	10uF	20%	16V
C755	1-162-964-11	CERAMIC CHIP	0.001uF	10%	50V
C756	1-164-505-11	CERAMIC CHIP	2.2uF		16V
C757	1-164-505-11	CERAMIC CHIP	2.2uF		16V
C781	1-126-936-11	ELECT	3300uF	20%	16V
C782	1-164-005-11	CERAMIC CHIP	0.47uF		25V
C783	1-164-005-11	CERAMIC CHIP	0.47uF		25V
C784	1-164-005-11	CERAMIC CHIP	0.47uF		25V
C785	1-163-009-11	CERAMIC CHIP	0.001uF	10%	50V
C786	1-163-009-11	CERAMIC CHIP	0.001uF	10%	50V
C991	1-163-009-11	CERAMIC CHIP	0.001uF	10%	50V
C993	1-163-009-11	CERAMIC CHIP	0.001uF	10%	50V
C995	1-126-935-11	ELECT	470uF	20%	16V
C999	1-162-927-11	CERAMIC CHIP	100PF	5%	50V
		< CONNECTOR >			
CN701	1-784-456-11	CONNECTOR, FFC/FPC 14P			
CNJ581	1-580-907-31	PLUG, CONNECTOR (BUS CONTROL IN)			
CNP301	1-764-617-12	PIN, CONNECTOR (PC BOARD) 30P			
CNP781	1-774-701-11	PIN, CONNECTOR 16P			
		< DIODE >			
D350	8-719-036-94	DIODE	RD5.6SB-T1		
D351	8-719-056-83	DIODE	UDZ-TE-17-6.8B		
D352	8-719-056-83	DIODE	UDZ-TE-17-6.8B		
D552	8-719-067-56	DIODE	MA112-TX		
D553	8-719-988-61	DIODE	1SS355TE-17		
D581	8-719-072-70	DIODE	MA2ZD14001S0		
D582	8-719-056-93	DIODE	UDZ-TE-17-18B		
D584	8-719-056-93	DIODE	UDZ-TE-17-18B		
D585	8-719-056-82	DIODE	UDZ-TE-17-6.2B		
D611	8-719-053-18	DIODE	1SR154-400TE-25		
D612	8-719-053-18	DIODE	1SR154-400TE-25		
D613	8-719-053-18	DIODE	1SR154-400TE-25		
D614	8-719-053-18	DIODE	1SR154-400TE-25		
D621	8-719-988-61	DIODE	1SS355TE-17		
D625	8-719-987-69	DIODE	DAN217		
D701	8-719-988-61	DIODE	1SS355TE-17		
D702	8-719-988-61	DIODE	1SS355TE-17		
D703	8-719-056-93	DIODE	MAZN12000LS0		
D710	8-719-085-72	DIODE	UMZ6.8ENTR		
D711	8-719-085-72	DIODE	UMZ6.8ENTR		
D712	8-719-085-72	DIODE	UMZ6.8ENTR		
D721	8-719-079-55	DIODE	PTZ-TE25-22		
D722	8-719-079-55	DIODE	PTZ-TE25-22		
D723	8-719-079-55	DIODE	PTZ-TE25-22		
D724	8-719-079-55	DIODE	PTZ-TE25-22		
D731	8-719-079-55	DIODE	PTZ-TE25-22		
D732	8-719-079-55	DIODE	PTZ-TE25-22		
D733	8-719-079-55	DIODE	PTZ-TE25-22		
D734	8-719-079-55	DIODE	PTZ-TE25-22		
D781	8-719-049-38	DIODE	1N5404TU		
D782	8-719-056-83	DIODE	UDZ-TE-17-6.8B		
D998	8-719-056-93	DIODE	UDZ-TE-17-18B		
D999	8-719-056-83	DIODE	UDZ-TE-17-6.8B		

MAIN

Ref. No.	Part No.	Description	Remark
		< IC >	
IC331	8-759-827-13	IC TDA7406T	
IC332	8-759-711-85	IC NJM4580E-D	
IC333	8-759-711-85	IC NJM4580E-D	
IC501	6-801-200-03	IC MN101C49KCY2	
IC551	6-701-405-01	IC PST3443UL	
IC581	8-759-449-89	IC BA8270F-E2	
IC601	6-600-051-01	IC AN80T51	
IC751	8-759-827-14	IC TA8268AH	
		< JACK >	
J10	1-815-185-12	JACK (ANTENNA)	
J561	1-566-822-41	JACK (REMOTE IN)	
		< COIL >	
L781	1-419-476-11	COIL, CHOKE 250uH	
L901	1-500-245-11	INDUCTOR, FERRITE BEAD	
L902	1-469-650-22	INDUCTOR, FERRITE BEAD	
		< JACK >	
PJ151	1-774-700-11	JACK, PIN 6P (BUS AUDIO IN, AUDIO OUT REAR/FRONT)	
		< TRANSISTOR >	
Q171	8-729-023-22	TRANSISTOR 2SD2114K	
Q181	8-729-023-22	TRANSISTOR 2SD2114K	
Q271	8-729-023-22	TRANSISTOR 2SD2114K	
Q281	8-729-023-22	TRANSISTOR 2SD2114K	
Q350	8-729-106-68	TRANSISTOR 2SD1615A-GP	
Q351	8-729-021-82	TRANSISTOR 2SD2396K	
Q352	8-729-047-76	TRANSISTOR FMC2A-T148	
Q353	8-729-900-53	TRANSISTOR DTC114EK	
Q551	8-729-027-23	TRANSISTOR DTA114EKA-T146	
Q571	8-729-120-28	TRANSISTOR 2SC1623-L5L6	
Q581	8-729-900-53	TRANSISTOR DTC114EK	
Q585	8-729-120-28	TRANSISTOR 2SC1623-L5L6	
Q601	8-729-106-60	TRANSISTOR 2SB1115A	
Q603	8-729-047-76	TRANSISTOR FMC2A-T148	
Q621	8-729-027-23	TRANSISTOR DTA114EKA-T146	
Q622	8-729-900-53	TRANSISTOR DTC114EK	
Q625	8-729-120-28	TRANSISTOR 2SC1623-L5L6	
Q631	8-729-047-76	TRANSISTOR FMC2A-T148	
		< RESISTOR >	
R10	1-216-864-11	METAL CHIP 0 5%	1/10W
R12	1-216-797-11	METAL CHIP 10 5%	1/10W
R13	1-216-815-11	METAL CHIP 330 5%	1/10W
R14	1-216-815-11	METAL CHIP 330 5%	1/10W
R28	1-216-864-11	METAL CHIP 0 5%	1/10W
R29	1-216-864-11	METAL CHIP 0 5%	1/10W
R31	1-218-867-11	RES-CHIP 6.8K 5%	1/10W
R32	1-216-845-11	METAL CHIP 100K 5%	1/10W
R41	1-216-841-11	METAL CHIP 47K 5%	1/10W
R142	1-216-821-11	METAL CHIP 1K 5%	1/10W
R143	1-216-833-11	METAL CHIP 10K 5%	1/10W
R170	1-216-813-11	METAL CHIP 220 5%	1/10W
R172	1-216-864-11	METAL CHIP 0 5%	1/10W
R174	1-216-864-11	METAL CHIP 0 5%	1/10W
R175	1-216-841-11	METAL CHIP 47K 5%	1/10W
R176	1-216-833-11	METAL CHIP 10K 5%	1/10W
R179	1-216-821-11	METAL CHIP 1K 5%	1/10W
R180	1-216-813-11	METAL CHIP 220 5%	1/10W
R181	1-216-864-11	METAL CHIP 0 5%	1/10W
R182	1-216-864-11	METAL CHIP 0 5%	1/10W
R184	1-216-864-11	METAL CHIP 0 5%	1/10W
R185	1-216-841-11	METAL CHIP 47K 5%	1/10W
R186	1-216-833-11	METAL CHIP 10K 5%	1/10W
R189	1-216-821-11	METAL CHIP 1K 5%	1/10W
R191	1-216-864-11	METAL CHIP 0 5%	1/10W
R242	1-216-821-11	METAL CHIP 1K 5%	1/10W
R243	1-216-833-11	METAL CHIP 10K 5%	1/10W
R270	1-216-813-11	METAL CHIP 220 5%	1/10W
R272	1-216-864-11	METAL CHIP 0 5%	1/10W
R274	1-216-864-11	METAL CHIP 0 5%	1/10W
R275	1-216-841-11	METAL CHIP 47K 5%	1/10W
R276	1-216-833-11	METAL CHIP 10K 5%	1/10W
R279	1-216-821-11	METAL CHIP 1K 5%	1/10W
R280	1-216-813-11	METAL CHIP 220 5%	1/10W
R281	1-216-864-11	METAL CHIP 0 5%	1/10W
R282	1-216-864-11	METAL CHIP 0 5%	1/10W
R284	1-216-864-11	METAL CHIP 0 5%	1/10W
R285	1-216-841-11	METAL CHIP 47K 5%	1/10W
R286	1-216-833-11	METAL CHIP 10K 5%	1/10W
R289	1-216-821-11	METAL CHIP 1K 5%	1/10W
R291	1-216-864-11	METAL CHIP 0 5%	1/10W
R330	1-216-841-11	METAL CHIP 47K 5%	1/10W
R332	1-216-833-11	METAL CHIP 10K 5%	1/10W
R333	1-216-833-11	METAL CHIP 10K 5%	1/10W
R334	1-216-833-11	METAL CHIP 10K 5%	1/10W
R335	1-216-833-11	METAL CHIP 10K 5%	1/10W
R336	1-216-833-11	METAL CHIP 10K 5%	1/10W
R337	1-216-833-11	METAL CHIP 10K 5%	1/10W
R338	1-216-833-11	METAL CHIP 10K 5%	1/10W
R339	1-216-833-11	METAL CHIP 10K 5%	1/10W
R340	1-216-833-11	METAL CHIP 10K 5%	1/10W
R341	1-216-833-11	METAL CHIP 10K 5%	1/10W
R343	1-216-797-11	METAL CHIP 10 5%	1/10W
R344	1-216-797-11	METAL CHIP 10 5%	1/10W
R345	1-216-797-11	METAL CHIP 10 5%	1/10W
R350	1-216-057-00	METAL CHIP 2.2K 5%	1/10W
R351	1-216-057-00	METAL CHIP 2.2K 5%	1/10W
R352	1-216-053-00	METAL CHIP 1.5K 5%	1/10W
R353	1-216-053-00	METAL CHIP 1.5K 5%	1/10W
R354	1-216-053-00	METAL CHIP 1.5K 5%	1/10W
R355	1-216-864-11	METAL CHIP 0 5%	1/10W
R356	1-469-844-11	INDUCTOR 2.2uH	
R357	1-216-864-11	METAL CHIP 0 5%	1/10W
R429	1-216-864-11	METAL CHIP 0 5%	1/10W
R431	1-216-864-11	METAL CHIP 0 5%	1/10W

Ref. No.	Part No.	Description			Remark
R433	1-216-864-11	METAL CHIP	0	5%	1/10W
R435	1-216-864-11	METAL CHIP	0	5%	1/10W
R448	1-216-864-11	METAL CHIP	0	5%	1/10W
R453	1-216-864-11	METAL CHIP	0	5%	1/10W
R462	1-216-864-11	METAL CHIP	0	5%	1/10W
R464	1-216-864-11	METAL CHIP	0	5%	1/10W
R500	1-216-813-11	METAL CHIP	220	5%	1/10W
R501	1-216-837-11	METAL CHIP	22K	5%	1/10W
R502	1-216-813-11	METAL CHIP	220	5%	1/10W
R503	1-216-845-11	METAL CHIP	100K	5%	1/10W
R504	1-216-821-11	METAL CHIP	1K	5%	1/10W
R505	1-216-821-11	METAL CHIP	1K	5%	1/10W
R506	1-216-821-11	METAL CHIP	1K	5%	1/10W
R507	1-216-841-11	METAL CHIP	47K	5%	1/10W
R508	1-216-845-11	METAL CHIP	100K	5%	1/10W
R509	1-216-809-11	METAL CHIP	100	5%	1/10W
R510	1-216-809-11	METAL CHIP	100	5%	1/10W
R511	1-216-809-11	METAL CHIP	100	5%	1/10W
R512	1-233-576-11	RES, CHIP NETWORK 100X4			
R513	1-233-576-11	RES, CHIP NETWORK 100X4			
R514	1-233-576-11	RES, CHIP NETWORK 100X4			
R515	1-216-845-11	METAL CHIP	100K	5%	1/10W
R517	1-216-845-11	METAL CHIP	100K	5%	1/10W
R519	1-216-849-11	METAL CHIP	220K	5%	1/10W
R521	1-216-845-11	METAL CHIP	100K	5%	1/10W
R524	1-216-833-11	METAL CHIP	10K	5%	1/10W
R525	1-216-833-11	METAL CHIP	10K	5%	1/10W
R526	1-216-833-11	METAL CHIP	10K	5%	1/10W
R527	1-216-833-11	METAL CHIP	10K	5%	1/10W
R528	1-216-845-11	METAL CHIP	100K	5%	1/10W
R529	1-216-845-11	METAL CHIP	100K	5%	1/10W
R531	1-216-845-11	METAL CHIP	100K	5%	1/10W
R532	1-216-845-11	METAL CHIP	100K	5%	1/10W
R536	1-216-845-11	METAL CHIP	100K	5%	1/10W
R538	1-216-845-11	METAL CHIP	100K	5%	1/10W
R541	1-216-845-11	METAL CHIP	100K	5%	1/10W
R544	1-216-845-11	METAL CHIP	100K	5%	1/10W
R547	1-216-845-11	METAL CHIP	100K	5%	1/10W
R551	1-216-809-11	METAL CHIP	100	5%	1/10W
R555	1-216-809-11	METAL CHIP	100	5%	1/10W
R556	1-216-845-11	METAL CHIP	100K	5%	1/10W
R557	1-216-845-11	METAL CHIP	100K	5%	1/10W
R560	1-216-845-11	METAL CHIP	100K	5%	1/10W
R561	1-216-845-11	METAL CHIP	100K	5%	1/10W
R562	1-208-806-11	RES-CHIP	10K	0.5%	1/10W
R563	1-216-809-11	METAL CHIP	100	5%	1/10W
R564	1-216-809-11	METAL CHIP	100	5%	1/10W
R565	1-216-845-11	METAL CHIP	100K	5%	1/10W
R566	1-216-845-11	METAL CHIP	100K	5%	1/10W
R571	1-216-829-11	METAL CHIP	4.7K	5%	1/10W
R572	1-216-841-11	METAL CHIP	47K	5%	1/10W
R573	1-216-841-11	METAL CHIP	47K	5%	1/10W
R574	1-216-841-11	METAL CHIP	47K	5%	1/10W
R575	1-216-222-00	RES-CHIP	10K	5%	1/8W
R576	1-216-222-00	RES-CHIP	10K	5%	1/8W

Ref. No.	Part No.	Description			Remark
R577	1-216-864-11	METAL CHIP	0	5%	1/10W
R578	1-216-864-11	METAL CHIP	0	5%	1/10W
R583	1-216-809-11	METAL CHIP	100	5%	1/10W
R584	1-216-809-11	METAL CHIP	100	5%	1/10W
R585	1-216-821-11	METAL CHIP	1K	5%	1/10W
R586	1-216-837-11	METAL CHIP	22K	5%	1/10W
R588	1-216-833-11	METAL CHIP	10K	5%	1/10W
R589	1-216-833-11	METAL CHIP	10K	5%	1/10W
R590	1-216-821-11	METAL CHIP	1K	5%	1/10W
R591	1-216-841-11	METAL CHIP	47K	5%	1/10W
R592	1-216-845-11	METAL CHIP	100K	5%	1/10W
R601	1-216-001-00	METAL CHIP	10	5%	1/10W
R602	1-216-001-00	METAL CHIP	10	5%	1/10W
R603	1-216-001-00	METAL CHIP	10	5%	1/10W
R604	1-216-001-00	METAL CHIP	10	5%	1/10W
R605	1-216-001-00	METAL CHIP	10	5%	1/10W
R606	1-216-001-00	METAL CHIP	10	5%	1/10W
R607	1-216-001-00	METAL CHIP	10	5%	1/10W
R608	1-216-001-00	METAL CHIP	10	5%	1/10W
R609	1-216-001-00	METAL CHIP	10	5%	1/10W
R610	1-216-809-11	METAL CHIP	100	5%	1/10W
R615	1-216-053-00	METAL CHIP	1.5K	5%	1/10W
R616	1-216-864-11	METAL CHIP	0	5%	1/10W
R622	1-216-805-11	METAL CHIP	47	5%	1/10W
R626	1-216-864-11	METAL CHIP	0	5%	1/10W
R629	1-216-849-11	METAL CHIP	220K	5%	1/10W
R630	1-216-864-11	METAL CHIP	0	5%	1/10W
R631	1-216-029-00	METAL CHIP	150	5%	1/10W
R632	1-216-029-00	METAL CHIP	150	5%	1/10W
R633	1-216-029-00	METAL CHIP	150	5%	1/10W
R634	1-216-029-00	METAL CHIP	150	5%	1/10W
R635	1-216-864-11	METAL CHIP	0	5%	1/10W
R690	1-216-864-11	METAL CHIP	0	5%	1/10W
R691	1-216-864-11	METAL CHIP	0	5%	1/10W
R701	1-208-806-11	RES-CHIP	10K	0.5%	1/10W
R702	1-208-806-11	RES-CHIP	10K	0.5%	1/10W
R710	1-216-809-11	METAL CHIP	100	5%	1/10W
R711	1-216-809-11	METAL CHIP	100	5%	1/10W
R712	1-216-809-11	METAL CHIP	100	5%	1/10W
R713	1-216-809-11	METAL CHIP	100	5%	1/10W
R714	1-216-809-11	METAL CHIP	100	5%	1/10W
R715	1-216-809-11	METAL CHIP	100	5%	1/10W
R716	1-216-029-00	METAL CHIP	150	5%	1/10W
R719	1-216-821-11	METAL CHIP	1K	5%	1/10W
R720	1-216-809-11	METAL CHIP	100	5%	1/10W
R721	1-216-001-00	METAL CHIP	10	5%	1/10W
R722	1-216-001-00	METAL CHIP	10	5%	1/10W
R723	1-216-809-11	METAL CHIP	100	5%	1/10W
R724	1-216-809-11	METAL CHIP	100	5%	1/10W
R725	1-216-809-11	METAL CHIP	100	5%	1/10W
R726	1-216-809-11	METAL CHIP	100	5%	1/10W
R727	1-216-809-11	METAL CHIP	100	5%	1/10W
R728	1-216-809-11	METAL CHIP	100	5%	1/10W
R729	1-216-809-11	METAL CHIP	100	5%	1/10W
R730	1-216-809-11	METAL CHIP	100	5%	1/10W

MAIN **SERVO**

Ref. No.	Part No.	Description			Remark
R751	1-216-833-11	METAL CHIP	10K	5%	1/10W
R752	1-216-821-11	METAL CHIP	1K	5%	1/10W
R753	1-216-841-11	METAL CHIP	47K	5%	1/10W
R754	1-218-867-11	RES-CHIP	6.8K	5%	1/10W
R782	1-216-864-11	METAL CHIP	0	5%	1/10W
R787	1-216-809-11	METAL CHIP	100	5%	1/10W
		< SWITCH >			
S551	1-692-431-21	SWITCH, TACTILE (RESET)			
S552	1-771-540-11	SWITCH, PUSH (1 KEY) (NOSE DET)			
S553	1-571-478-11	SWITCH, SLIDE (FREQUENCY SELECT)			
		< THERMISTOR (POSITIVE) >			
TH501	1-803-350-21	THERMISTOR, POSITIVE			
		< TUNER >			
TU10	A-3220-812-A	TUNER UNIT (TUX-020)			
		< VIBRATOR >			
X501	1-781-294-21	VIBRATOR, CRYSTAL (18.432MHz)			
X502	1-567-098-41	VIBRATOR, CRYSTAL (32.768kHz)			

****

	A-3283-270-A	SERVO BOARD, COMPLETE			
		**********			
	1-683-666-11	PICK-UP FLEXIBLE BOARD			
		< CAPACITOR >			
C1	1-162-970-11	CERAMIC CHIP	0.01uF	10%	25V
C3	1-162-970-11	CERAMIC CHIP	0.01uF	10%	25V
C4	1-104-609-11	ELECT CHIP	100uF	20%	4V
C5	1-162-970-11	CERAMIC CHIP	0.01uF	10%	25V
C6	1-162-970-11	CERAMIC CHIP	0.01uF	10%	25V
C8	1-107-826-11	CERAMIC CHIP	0.1uF	10%	16V
C9	1-162-924-11	CERAMIC CHIP	56PF	5%	50V
C10	1-162-924-11	CERAMIC CHIP	56PF	5%	50V
C11	1-162-909-11	CERAMIC CHIP	4PF	0.25PF	50V
C13	1-162-916-11	CERAMIC CHIP	12PF	5%	50V
C14	1-125-837-11	CERAMIC CHIP	1uF	10%	6.3V
C15	1-162-970-11	CERAMIC CHIP	0.01uF	10%	25V
C16	1-162-970-11	CERAMIC CHIP	0.01uF	10%	25V
C17	1-162-970-11	CERAMIC CHIP	0.01uF	10%	25V
C18	1-162-966-11	CERAMIC CHIP	0.0022uF	10%	50V
C19	1-107-826-11	CERAMIC CHIP	0.1uF	10%	16V
C20	1-107-826-11	CERAMIC CHIP	0.1uF	10%	16V
C22	1-162-970-11	CERAMIC CHIP	0.01uF	10%	25V
C23	1-162-970-11	CERAMIC CHIP	0.01uF	10%	25V
C24	1-162-970-11	CERAMIC CHIP	0.01uF	10%	25V
C25	1-162-970-11	CERAMIC CHIP	0.01uF	10%	25V
C26	1-126-391-11	ELECT CHIP	47uF	20%	6.3V
C27	1-162-970-11	CERAMIC CHIP	0.01uF	10%	25V
C29	1-162-970-11	CERAMIC CHIP	0.01uF	10%	25V
C30	1-162-970-11	CERAMIC CHIP	0.01uF	10%	25V
C34	1-162-970-11	CERAMIC CHIP	0.01uF	10%	25V
C35	1-162-970-11	CERAMIC CHIP	0.01uF	10%	25V
C36	1-162-970-11	CERAMIC CHIP	0.01uF	10%	25V
C38	1-162-970-11	CERAMIC CHIP	0.01uF	10%	25V
C41	1-162-970-11	CERAMIC CHIP	0.01uF	10%	25V
C43	1-162-967-11	CERAMIC CHIP	0.0033uF	10%	50V
C44	1-162-964-11	CERAMIC CHIP	0.001uF	10%	50V
C70	1-125-837-11	CERAMIC CHIP	1uF	10%	6.3V
C71	1-107-826-11	CERAMIC CHIP	0.1uF	10%	16V
		< CONNECTOR >			
CN1	1-764-616-12	HOUSING, CONNECTOR (PC BOARD) 30P			
CN3	1-770-347-21	CONNECTOR, FPC 6P			
		< RESISTOR >			
FB5	1-216-298-11	RES-CHIP	2.2	5%	1/10W
		< IC >			
IC1	8-759-699-98	IC uPD63711GC-8EU			
IC2	8-759-658-87	IC BA5810FP-E2			
		< TRANSISTOR >			
Q1	8-729-904-87	TRANSISTOR 2SB1197K-R			
		< RESISTOR >			
R3	1-216-797-11	METAL CHIP	10	5%	1/10W
R5	1-218-344-11	RES-CHIP	7.5K	5%	1/10W
R6	1-216-837-11	METAL CHIP	22K	5%	1/10W
R7	1-216-839-11	METAL CHIP	33K	5%	1/10W
R8	1-216-833-11	METAL CHIP	10K	5%	1/10W
R9	1-216-840-11	METAL CHIP	39K	5%	1/10W
R10	1-216-835-11	METAL CHIP	15K	5%	1/10W
R12	1-216-837-11	METAL CHIP	22K	5%	1/10W
R14	1-216-841-11	METAL CHIP	47K	5%	1/10W
R15	1-216-841-11	METAL CHIP	47K	5%	1/10W
R17	1-216-809-11	METAL CHIP	100	5%	1/10W
R18	1-216-809-11	METAL CHIP	100	5%	1/10W
R19	1-216-809-11	METAL CHIP	100	5%	1/10W
R20	1-216-809-11	METAL CHIP	100	5%	1/10W
R21	1-216-821-11	METAL CHIP	1K	5%	1/10W
R22	1-216-821-11	METAL CHIP	1K	5%	1/10W
R26	1-216-797-11	METAL CHIP	10	5%	1/10W
R29	1-216-833-11	METAL CHIP	10K	5%	1/10W
R30	1-216-833-11	METAL CHIP	10K	5%	1/10W
R31	1-216-789-11	METAL CHIP	2.2	5%	1/10W
		< VIBRATOR >			
X1	1-795-520-11	VIBRATOR, CERAMIC (16.9344MHz)			

****

Ref. No.	Part No.	Description	Remark
	1-659-834-11	SUB BOARD **********	
	1-659-880-11	MOTOR FLEXIBLE BOARD	
		< CONNECTOR >	
CN1	1-770-347-21	CONNECTOR, FPC 6P	
**********			
*	1-680-762-11	SUB (CD) BOARD **********	
	1-792-195-11	CABLE, FLEXIBLE FLAT (14 CORE) (CNP802)	
		< CONNECTOR >	
CNP801	1-794-064-12	SOCKET, CONNECTOR 14P	
		< DIODE >	
LED801	8-719-082-38	LED CL-270SR-C-TS (CD WINDOW)	
		< SWITCH >	
LSW801	1-771-883-11	SWITCH, TACTILE (WITH LED) (⏏)	
**********			
		MISCELLANEOUS **********	
9	1-776-207-82	CORD (WITH CONNECTOR) (POWER)	
251	X-3381-611-1	CHASSIS (OP) ASSY (including M901)	
⚠260	8-820-103-11	PICK-UP, OPTICAL KSS-720A/C-RP	
F901	1-532-877-11	FUSE (BLADE TYPE) (AUTO FUSE) 10A	
M902	A-3291-674-A	MOTOR ASSY, SLED (SLED)	
M903	A-3315-039-A	MOTOR SUB ASSY, LD (LOADING)	
**********			
		ACCESSORIES **********	
	1-477-110-21	REMOTE COMMANDER (RM-X118)	
	3-230-047-01	LID, BATTRY CASE (for RM-X118)	
	3-237-887-11	MANUAL, INSTRUCTION (ENGLISH,FRENCH)	
	3-237-888-11	MANUAL, INSTRUCTION INSTALL (ENGLISH, FRENCH)	
	X-3378-490-2	CASE (PANEL) ASSY (for FRONT PANEL)	
**********			

Ref. No.	Part No.	Description	Remark
		PARTS FOR INSTALLATION AND CONNECTIONS **********	
301	X-3381-546-1	FRAME ASSY, FITTING	
302	3-934-325-01	SCREW, +K (5X8) TAPPING	
303	3-236-447-02	COLLAR	
304	3-233-644-02	SPRING, FITTING	
305	1-776-207-82	CORD (WITH CONNECTOR) (POWER)	

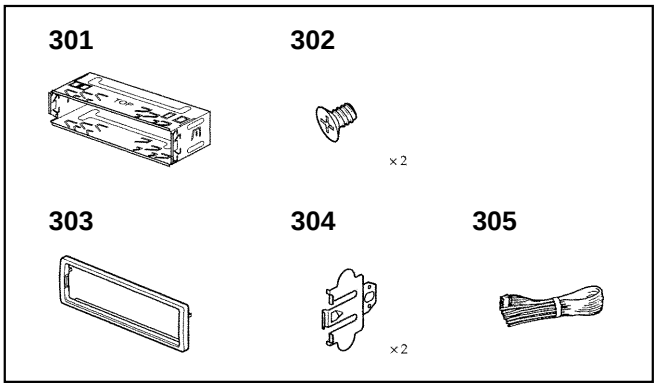

The components identified by mark ⚠ or dotted line with mark ⚠ are critical for safety.
Replace only with part number specified.

REVISION HISTORY

Clicking the version allows you to jump to the revised page.
Also, clicking the version at the upper on the revised page allows you to jump to the next revised page.

Ver.	Date	Description of Revision
1.0	2002. 04	New
1.1	2003. 02	Change of Part No. for IC501 on MAIN board (ECN-CSA06072)